MITSUBISHI ELECTRIC

CITY MULTI

Air-Conditioners For Building Application
INDOOR UNIT

PKFY-P·VAM-E / PKFY-P·VGM-E
PKFY-P·VFM-E / PMFY-P·VBM-E
PCFY-P·VGM-E / PLFY-P·VAM-E
PFFY-P·VKM-E

OPERATION MANUAL
FOR USER

For safe and correct use, please read this operation manual thoroughly before operating the air-conditioner unit.

English

BEDIENUNGSHANDBUCH
FÜR BENUTZER

Zum sicheren und einwandfreien Gebrauch der Klimaanlage dieses Bedienungshandbuch vor Inbetriebnahme gründlich durchlesen.

Deutsch

MANUEL D'UTILISATION
POUR L'UTILISATEUR

Pour une utilisation correcte sans risques, veuillez lire le manuel d'utilisation en entier avant de vous servir du climatiseur.

Français

BEDIENINGSHANDLEIDING
VOOR DE GEBRUIKER

Voor een veilig en juist gebruik moet u deze bedieningshandleiding grondig doorlezen voordat u de airconditioner gebruikt.

Nederlands

MANUAL DE INSTRUCCIONES
PARA EL USUARIO

Lea este manual de instrucciones hasta el final antes de poner en marcha la unidad de aire acondicionado para garantizar un uso seguro y correcto.

Español

ISTRUZIONI DI FUNZIONAMENTO
PER L'UTENTE

Leggere attentamente questi istruzioni di funzionamento prima di avviare l'unità, per un uso corretto e sicuro della stessa.

Italiano

ΕΓΧΕΙΡΙΔΙΟ ΟΔΗΓΙΩΝ ΧΡΗΣΕΩΣ
ΓΙΑ ΤΟΝ ΧΡΗΣΤΗ

Για ασφάλεια και σωστή χρήση, παρακαλείστε διαβάσετε προσεχτικά αυτό το εγχειρίδιο χρήσεως πριν θέσετε σε λειτουργία τη μονάδα κλιματισμού.

Ελληνικά

MANUAL DE OPERAÇÃO
PARA O UTILIZADOR

Para segurança e utilização correctas, leia atentamente o manual de operação antes de pôr a funcionar a unidade de ar condicionado.

Português

Işletme Elkitabı
KULLANICI İÇİN

Emniyetli ve doğru biçimde nasıl kullanılacağını öğrenmek için lütfen klima cihazını işletmeden önce bu elkitabını dikkatle okuyunuz.

Türkçe

РУКОВОДСТВО ПО ЭКСПЛУАТАЦИИ
ДЛЯ ПОЛЬЗОВАТЕЛЯ

Для обеспечения правильного и безопасного использования следует ознакомиться с инструкциями, указанными в данном руководстве по эксплуатации, тщательным образом до того, как приступать к использованию кондиционера.

Русский

操作说明书
用户适用 (安装人员适用)

在操作空调机之前，请全面阅读本操作说明书，以便安全和正确地使用本机。

中文

Contents

1. Safety Precautions 2
2. Parts Names 3
3. Screen Configuration 5
4. Setting the Day of the Week and Time 5
5. Operation 5
6. Timer 7
7. Other Functions 10
8. Function Selection 11
9. Care and Cleaning 15
10. Trouble Shooting 16
11. Specifications 19

Note (Marking for WEEE)

This symbol mark is for EU countries only.
This symbol mark is according to the directive 2002/96/EC Article 10 Information for users and Annex IV.

Your MITSUBISHI ELECTRIC product is designed and manufactured with high quality materials and components which can be recycled and reused.
This symbol means that electrical and electronic equipment, at their end-of-life, should be disposed of separately from your household waste.
Please, dispose of this equipment at your local community waste collection/recycling centre.
In the European Union there are separate collection systems for used electrical and electronic product.
Please, help us to conserve the environment we live in!

1. Safety Precautions

- **Before installing the unit, make sure you read all the "Safety Precautions".**
- **The "Safety Precautions" provide very important points regarding safety. Make sure you follow them.**
- **Please report to or take consent by the supply authority before connection to the system.**

Symbols used in the text

⚠ Warning:
Describes precautions that should be observed to prevent danger of injury or death to the user.

⚠ Caution:
Describes precautions that should be observed to prevent damage to the unit.

Symbols used in the illustrations

⏚ : Indicates a part which must be grounded.

⚠ Warning:

- **The unit must not be installed by the user. Ask the dealer or an authorized company to install the unit. If the unit is installed improperly, water leakage, electric shock or fire may result.**
- **Do not stand on, or place any items on the unit.**
- **Do not splash water over the unit and do not touch the unit with wet hands. An electric shock may result.**
- **Do not spray combustible gas close to the unit. Fire may result.**
- **Do not place a gas heater or any other open-flame appliance where it will be exposed to the air discharged from the unit. Incomplete combustion may result.**
- **Do not remove the front panel or the fan guard from the outdoor unit when it is running.**
- **Never repair the unit or transfer it to another site by yourself.**
- **When you notice exceptionally abnormal noise or vibration, stop operation, turn off the power switch, and contact your dealer.**
- **Never insert fingers, sticks etc. into the intakes or outlets.**
- **If you detect odd smells, stop using the unit, turn off the power switch and consult your dealer. Otherwise, a breakdown, electric shock or fire may result.**
- **This air conditioner is NOT intended for use by children or infirm persons without supervision.**
- **Young children must be supervised to ensure that they do not play with the air conditioner.**
- **If the refrigeration gas blows out or leaks, stop the operation of the air conditioner, thoroughly ventilate the room, and contact your dealer.**

⚠ Caution:

- **Do not use any sharp object to push the buttons, as this may damage the remote controller.**
- **Never block or cover the indoor or outdoor unit's intakes or outlets.**
- **Never wipe the remote controller with benzene, thinner chemical rags, etc.**
- **Do not operate the unit for a long time in high humidity, e.g. leaving a door or window open. In the cooling mode, if the unit is operated in a room with high humidity (80% RH or more) for a long time, water condensed in the air conditioner may drop and wet or damage furniture, etc.**
- **Do not touch the upper air outlet vane or the lower air outlet damper during operation. Otherwise, condensation may form and the unit may stop operating.**

Disposing of the unit

When you need to dispose of the unit, consult your dealer.

2. Parts Names

■ **Indoor Unit**

	PLFY-P·VAM-E	PKFY-P·VAM-E	PKFY-P·VGM-E	PKFY-P·VFM-E	PCFY-P·VGM-E
Fan steps	4 steps	4 steps	4 steps	2 steps	4 steps
Vane	Auto with swing	Auto with swing	Auto with swing	Auto with swing	Auto with swing
Louver	–	Manual	Manual	Manual	Manual
Filter	Long-life	Normal	Normal	Normal	Long-life
Filter cleaning indication	2,500 hr	100 hr	100 hr	100 hr	2,500 hr

	PMFY-P·VBM-E	PFFY-P·VKM-E
Fan steps	4 steps	4 steps
Vane	Auto with swing	Auto with swing
Louver	Manual	Manual
Filter	Normal	Normal
Filter cleaning indication	100 hr	100 hr

■ **PLFY-P·VAM-E**
4-way Ceiling Cassette

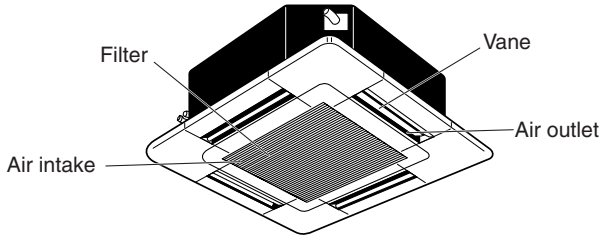

■ **PMFY-P·VBM-E**
1-way Ceiling Cassette

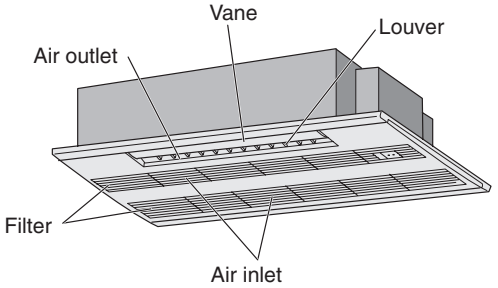

■ **PKFY-P·VAM-E/PKFY-P·VGM-E**
Wall Mounted

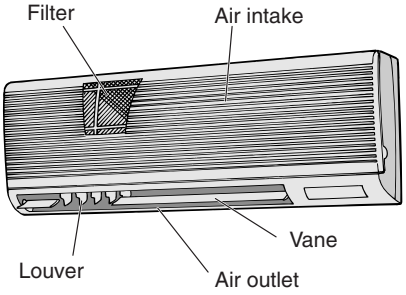

■ **PKFY-P·VFM-E**
Wall Mounted

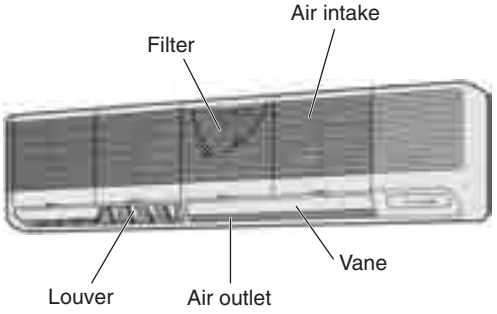

■ **PCFY-P·VGM-E**
Ceiling Suspended

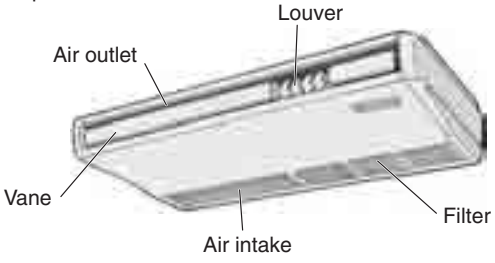

■ **PFFY-P·VKM-E**
Floor Standing

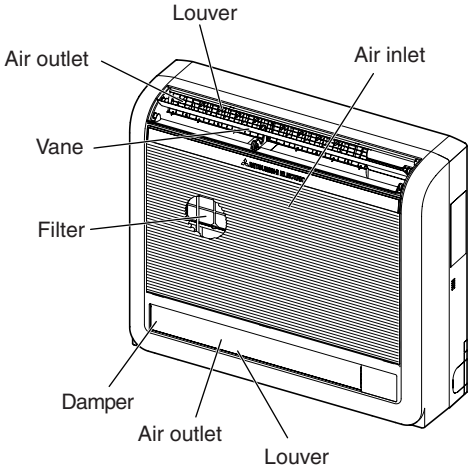

■ **Wired Remote-Controller**

Display Section

For purposes of this explanation, all parts of the display are shown as lit. During actual operation, only the relevant items will be lit.

Day-of-Week
Shows the current day of the week.

Time/Timer Display
Shows the current time, unless the simple or Auto Off timer is set.
If the simple or Auto Off timer is set, shows the time remaining.

"Sensor" indication
Displayed when the remote controller sensor is used.

"Locked" indicator
Indicates that remote controller buttons have been locked.

"Clean The Filter" indicator
Comes on when it is time to clean the filter.

Timer indicators
The indicator comes on if the corresponding timer is set.

Fan Speed indicator
Shows the selected fan speed.

Ventilation indicator
Appears when the unit is running in Ventilation mode.

Identifies the current operation
Shows the operating mode, etc.
* Multi-language display is supported.

"Centrally Controlled" indicator
Indicates that operation of the remote controller has been prohibited by a master controller.

"Timer is Off" indicator
Indicates that the timer is off.

Temperature Setting
Shows the target temperature.

Up/Down Air Direction indicator
The indicator shows the direction of the airflow.

"One Hour Only" indicator
Displayed if the airflow is set to weak and downward during COOL or DRY mode. (Operation varies according to model.) The indicator goes off after one hour, at which time the airflow direction also changes.

Room Temperature display
Shows the room temperature. The room temperature display range is 8–39°C. The display flashes if the temperature is less than 8 °C or 39 °C or more.

Louver display
Indicates the action of the swing louver. Does not appear if the louver is stationary.

(Power On indicator)
Indicates that the power is on.

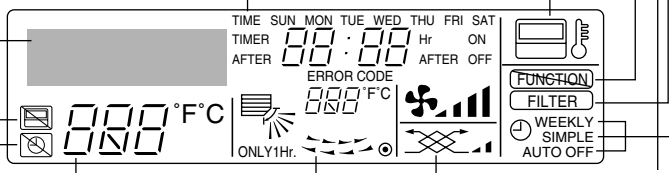

Operation Section

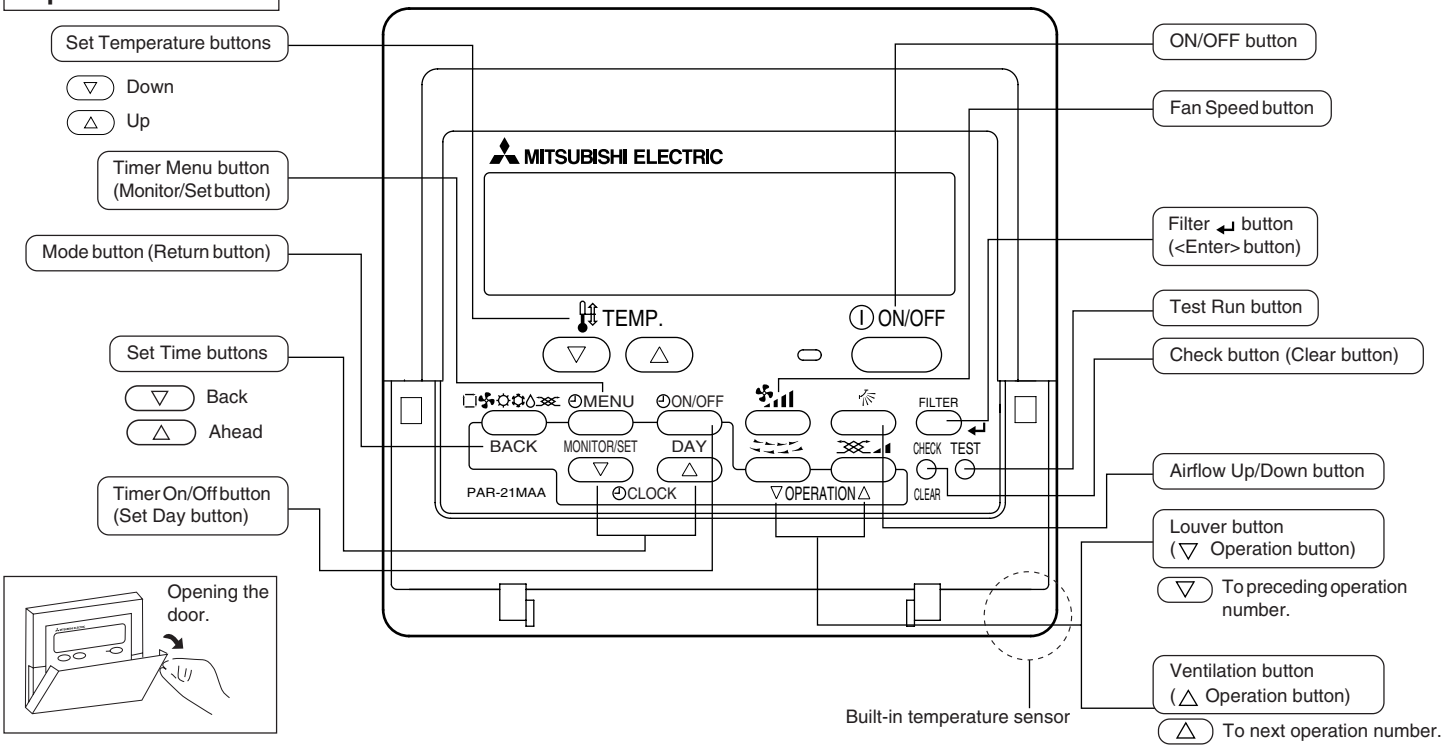

Note:

- "PLEASE WAIT" message
  This message is displayed for approximately 3 minutes when power is supplied to the indoor unit or when the unit is recovering from a power failure.
- Operation mode flashing display
  When multiple indoor units are connected to a single outdoor unit and an operation mode is selected for one indoor unit that is different from the current operation mode of another indoor unit, the operation mode display flashes. Select the same operation mode of the other indoor unit.
- "NOT AVAILABLE" message
  This message is displayed if a button is pressed to operate a function that the indoor unit does not have.
  When the same remote controller is used to operate multiple indoor units, this message is displayed if the main indoor unit is not equipped with the selected function.
- Room temperature display
  The indoor unit temperature sensors or the remote controller temperature sensor can be selected to measure the room temperature. The indoor unit temperature sensors are the initial setting. When the indoor unit temperature sensors are selected to measure the room temperature, the room temperature measured at the main indoor unit is displayed on the remote controller that operates multiple indoor units.

3. Screen Configuration

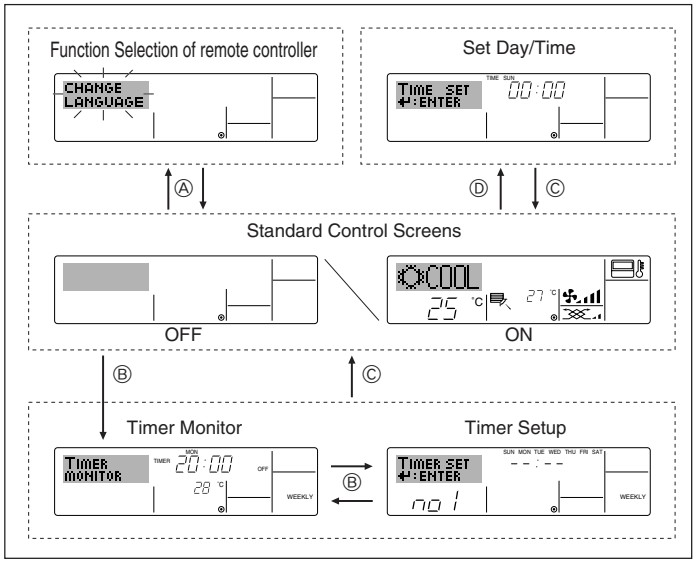

<Screen Types>

For details on setting the language for the remote controller display, refer to section 8. Function Selection.

The initial language setting is English.

- Function Selection of remote controller: Set the functions and ranges available to the remote controller (timer functions, operating restrictions, etc.)
- Set Day/Time: Set the current day of the week or time.
- Standard Control Screens: View and set the air conditioning system's operating status
- Timer Monitor: View the currently set timer (weekly timer, simple timer, or Auto Off timer)
- Timer Setup: Set the operation of any of the timers (weekly timer, simple timer, or Auto Off timer).

<How to change the screen>

Ⓐ : Hold down both the Mode button and the Timer On/Off button for 2 seconds.

Ⓑ : Press the Timer Menu button.

Ⓒ : Press the Mode (Return) button.

Ⓓ : Press either of the Set Time buttons (▽ or △).

4. Setting the Day of the Week and Time

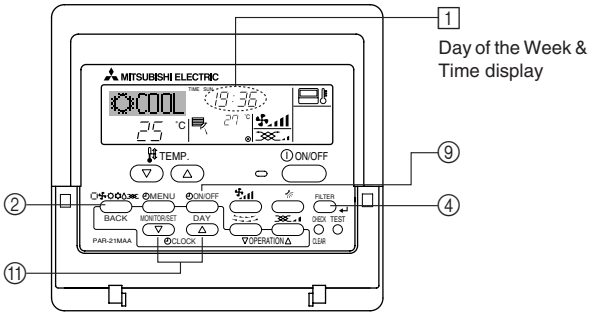

Note:

The day and time will not appear if clock use has been disabled at Function Selection of remote controller.

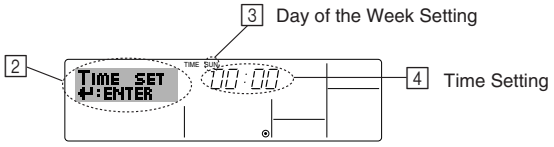

1. Press the ▽ or △ Set Time button ⑪ to show display 2.
2. Press the Timer On/Off (Set Day) button ⑨ to set the day.
   * Each press advances the day shown at 3 : Sun → Mon → ... → Fri → Sat.
3. Press the appropriate Set Time button ⑪ as necessary to set the time.
   * As you hold the button down, the time (at 4) will increment first in minute intervals, then in ten-minute intervals, and then in one-hour intervals.
4. After making the appropriate settings at Steps 2 and 3, press the Filter button ④ to lock in the values.

5. Operation

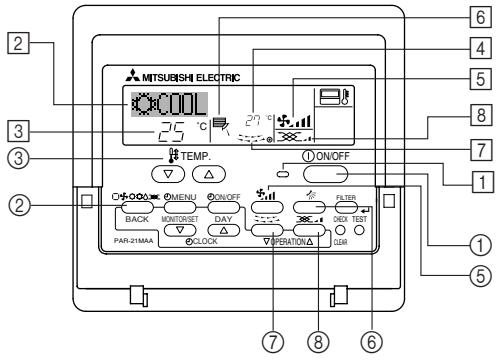

5.1. Turning ON/OFF

<To Start Operation>

■ Press the ON/OFF button ①.

- The ON lamp 1 and the display area come on.

Note:

- **When the unit is restarted, initial settings are as follows.**

	Remote Controller settings		
Mode	Last operation mode		
Temperature setting	Last set temperature		
Fan speed	Last set fan speed		
Airflow up/down	Mode	COOL or DRY	Horiz. outlet
		HEAT	Last setting
		FAN	Horiz. outlet

<To Stop Operation>

■ Press the ON/OFF button ① again.
- The ON lamp [1] and the display area go dark.

Note:
Even if you press the ON/OFF button immediately after shutting down the operation is progress, the air conditioner will not start for about three minutes. This is to prevent the internal components from being damaged.

5.2. Mode select

■ Press the operation mode (□✤☼☼💧) button ② and select the operation mode [2].

- Cooling mode
- Drying mode
- Fan mode
- Heating mode
- Automatic (cooling/heating) mode

Automatic operation

■ According to a set temperature, cooling operation starts if the room temperature is too hot and heating operation starts if the room temperature is too cold.

■ During automatic operation, if the room temperature changes and remains 1.5 °C or more above the set temperature for 3 minutes, the air conditioner switches to cooling mode. In the same way, if the room temperature remains 1.5 °C or more below the set temperature for 3 minutes, the air conditioner switches to heating mode.

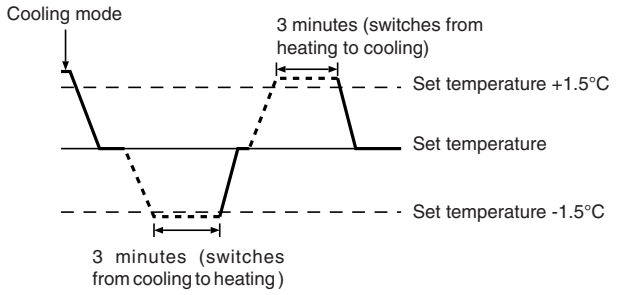

■ Because the room temperature is automatically adjusted in order to maintain a fixed effective temperature, cooling operation is performed a few degrees warmer and heating operation is performed a few degrees cooler than the set room temperature once the temperature is reached (automatic energy-saving operation).

5.3. Temperature setting

▶ To decrease the room temperature:
Press ▼ button ③ to set the desired temperature.
The selected temperature is displayed [3].

▶ To increase the room temperature:
Press ▲ button ③ to set the desired temperature.
The selected temperature is displayed [3].

- Available temperature ranges are as follows:
  Cooling/Drying: 19 - 30 °C
  Heating: 17 - 28 °C
  Automatic: 19 - 28 °C
- The display flashes either 8 °C - 39 °C to inform you if the room temperature is lower or higher than the displayed temperature.

5.4. Fan speed setting

■ Press the Fan Speed button ⑤ as many times as necessary while the system is running.
- Each press changes the force. The currently selected speed is shown at [5].
- The change sequence, and the available settings, are as follows.

FAN SPEED	Display
4-speed model	Speed 1 → Speed 2 → Speed 3 → Speed 4 →
2-speed model	→ →

Note:
- **The number of available fan speeds depends on the type of unit connected. Note also that some units do not provide an "Auto" setting.**
- **In the following cases, the actual fan speed generated by the unit will differ from the speed shown the remote controller display.**
  1. **While the display is showing "STAND BY" or "DEFROST".**
  2. **When the temperature of the heat exchanger is low in the heating mode. (e.g. immediately after heating operation starts)**
  3. **In HEAT mode, when room temperature is higher than the temperature setting.**
  4. **When the unit is in DRY mode.**

5.5. Airflow direction setting

<To Change the Airflow's Up/Down Direction>

■ With the unit running, press the Airflow Up/Down button ⑥ as necessary.
- Each press changes the direction. The current direction is shown at [6].
- The change sequence, and the available settings, are as follows.

Display	1 (Horiz.) → 2 → 3 → 4 → Swing

* Note that during swing operation, the directional indication on the screen does not change in sync with the directional vanes on the unit.
* Some models do not support directional settings.

Note:
- **Available directions depend on the type of unit connected. Note also that some units do not provide an "Auto" setting.**
- **In the following cases, the actual air direction will differ from the direction indicated on the remote controller display.**
  1. **While the display is showing "STAND BY" or "DEFROST".**
  2. **Immediately after starting heater mode (while the system is waiting for the mode change to take effect).**
  3. **In heat mode, when room temperature is higher than the temperature setting.**

(For PFFY-P·VKM series)
- **For the PFFY-P·VKM series, the airflow direction displayed on the remote controller is different from the actual airflow direction. Refer to the following table.**

Display	1 (Horiz.) → 2 → 3 → 4 → Swing
Actual	1 → 2 → 3 → 4 (Horiz.) → Swing

- **The airflow direction for the lower air outlet damper cannot be set. The airflow direction is automatically controlled by a computer.**

5. Operation

<To Change the Right/Left Air Direction>

■ Press the louver button ⑦ as necessary.

- The louver image [7] appears.
  Each press of the button switches the setting as follows.

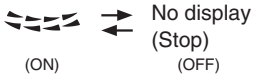

During swing operation, the arrow display move to the left and right.

5.6. Ventillation

▶ For LOSSNAY combination

5.6.1. For Wired Remote-controller

● To run the ventilator together with the indoor unit:

■ Press the ON/OFF button ①.

- The Vent indication appears on the screen (at [8]). The ventilator will now automatically operate whenever the indoor unit is running.

● To run the ventilator only when the indoor unit is off:

■ Press the Ventilation button ⑧ while the indoor unit is off.

- The On lamp (at [1]) and the Vent indication (at [8]) come on.

● To change the ventilator force:

■ Press the Ventilation button ⑧ as necessary.

- Each press toggles the setting, as shown below.

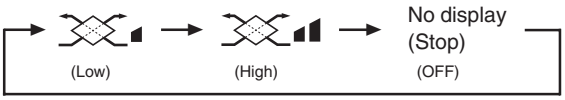

Note:

● **With some model configurations, the fan on the indoor unit may come on even when you set the ventilator to run independently.**

6. Timer

6.1. For Wired Remote-controller

You can use Function Selection of remote controller to select which of three types of timer to use: ① Weekly timer, ② Simple timer, or ③ Auto Off timer.

6.1.1. Weekly Timer

■ The weekly timer can be used to set up to eight operations for each day of the week.

- Each operation may consist of any of the following: ON/OFF time together with a temperature setting, or ON/OFF time only, or temperature setting only.
- When the current time reaches a time set at this timer, the air conditioner carries out the action set by the timer.

■ Time setting resolution for this timer is 1 minute.

Note:

***1. Weekly Timer/Simple Timer/Auto Off Timer cannot be used at the same time.**

***2. The weekly timer will not operate when any of the following conditions is in effect.**
The timer feature is off; the system is in an malfunction state; a test run is in progress; the remote controller is undergoing self-check or remote controller check; the user is in the process of setting a function; the user is in the process of setting the timer; the user is in the process of setting the current day of the week or time; the system is under central control. (Specifically, the system will not carry out operations (unit on, unit off, or temperature setting) that are prohibited during these conditions.)

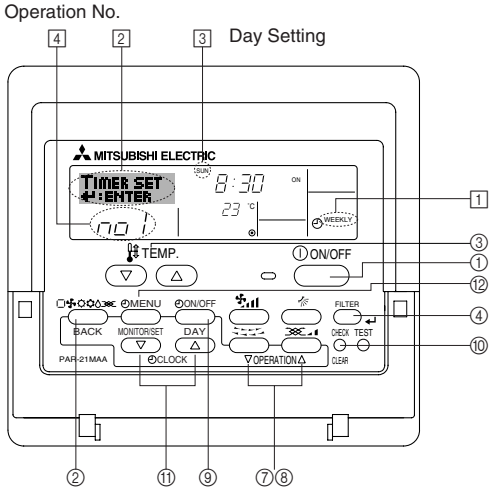

<How to Set the Weekly Timer>

1. Be sure that you are at a standard control screen, and that the weekly timer indicator [1] is shown in the display.
2. Press the Timer Menu button ⑫, so that the "Set Up" appears on the screen (at [2]). (Note that each press of the button toggles the display between "Set Up" and "Monitor".)
3. Press the Timer On/Off (Set Day) button ⑨ to set the day. Each press advances the display at [3] to the next setting, in the following sequence: "Sun Mon Tues Wed Thurs Fri Sat" → "Sun" → ... → "Fri" → "Sat" → "Sun Mon Tues Wed Thurs Fri Sat"...
4. Press the ▽ or △ Operation button (⑦ or ⑧) as necessary to select the appropriate operation number (1 to 8) [4].
   * Your inputs at Steps 3 and 4 will select one of the cells from the matrix illustrated below.
   (The remote-controller display at left shows how the display would appear when setting Operation 1 for Sunday to the values indicated below.)

Setup Matrix

Op No.	Sunday	Monday	…	Saturday
No. 1	• 8:30 • ON • 23 °C			
No. 2	• 10:00 • OFF	• 10:00 • OFF	• 10:00 • OFF	• 10:00 • OFF
…				
No. 8				

<Operation 1 settings for Sunday>
Start the air conditioner at 8:30, with the temperature set to 23 °C.

<Operation 2 settings for every day>
Turn off the air conditioner at 10:00.

Note:

By setting the day to "Sun Mon Tues Wed Thurs Fri Sat", you can set the same operation to be carried out at the same time every day.
(Example: Operation 2 above, which is the same for all days of the week.)

<Setting the Weekly Timer>

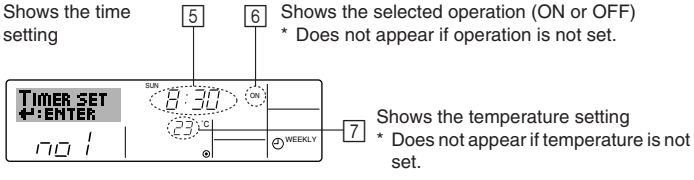

5. Press the appropriate Set Time button ⑪ as necessary to set the desired time (at [5]).
   * As you hold the button down, the time first increments in minute intervals, then in ten-minute intervals, and then in one-hour intervals.
6. Press the ON/OFF button ① to select the desired operation (ON or OFF), at [6].
   * Each press changes the next setting, in the following sequence: No display (no setting) → "ON" → "OFF"

7. Press the appropriate Set Temperature button ③ to set the desired temperature (at 7).
   * Each press changes the setting, in the following sequence: No display (no setting) ⇔ 24 ⇔ 25 ⇔ ... ⇔ 29 ⇔ 30 ⇔ 12 ⇔ ... ⇔ 23 ⇔ No display.
     (Available range: The range for the setting is 12 °C to 30 °C. The actual range over which the temperature can be controlled, however, will vary according to the type of the connected unit.)
8. After making the appropriate settings at Steps 5, 6 and 7, press the Filter ↵ button ④ to lock in the values.
   To clear the currently set values for the selected operation, press and quickly release the Check (Clear) button ⑩ once.
   * The displayed time setting will change to "—:—", and the On/Off and temperature settings will all disappear.
     (To clear all weekly timer settings at once, hold down the Check (Clear) button ⑩ for two seconds or more. The display will begin flashing, indicating that all settings have been cleared.)

Note:
Your new entries will be cancelled if you press the Mode (Return) button ② before pressing the Filter ↵ button ④.
If you have set two or more different operations for exactly the same time, only the operation with the highest Operation No. will be carried out.

9. Repeat Steps 3 to 8 as necessary to fill as many of the available cells as you wish.
10. Press the mode (Return) button ② to return to the standard control screen and complete the setting procedure.
11. To activate the timer, press the Timer On/Off button ⑨, so that the "Timer Off" indication disappears from the screen. **<u>Be sure that the "Timer Off" indication is no longer displayed.</u>**
    * If there are no timer settings, the "Timer Off" indication will flash on the screen.

<How to View the Weekly Timer Settings>

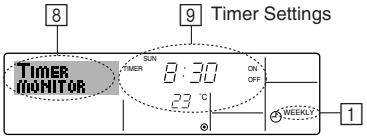

1. Be sure that the weekly timer indicator is visible on the screen (at 1).
2. Press the Timer Menu button ⑫ so that "Monitor" is indicated on the screen (at 8).
3. Press the Timer On/Off (Set Day) button ⑨ as necessary to select the day you wish to view.
4. Press the ▽ or △ Operation button (⑦ or ⑧) as necessary to change the timer operation shown on the display (at 9).
   * Each press will advance to the next timer operation, in order of time setting.
5. To close the monitor and return to the standard control screen, press the Mode (Return) button ②.

<To Turn Off the Weekly Timer>
Press the Timer On/Off button ⑨ so that "Timer Off" appears at 10.

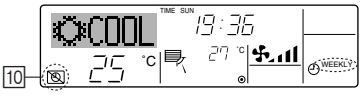

<To Turn On the Weekly Timer>
Press the Timer On/Off button ⑨ so that the "Timer Off" indication (at 10) goes dark.

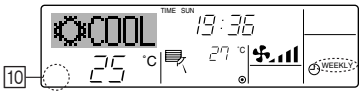

6.1.2. Simple Timer

■ You can set the simple timer in any of three ways.
- Start time only:
  The air conditioner starts when the set time has elapsed.
- Stop time only:
  The air conditioner stops when the set time has elapsed.
- Start & stop times:
  The air conditioner starts and stops at the respective elapsed times.

■ The simple timer (start and stop) can be set only once within a 72-hour period.
The time setting is made in hour increments.

Note:
***1. Weekly Timer/Simple Timer/Auto Off Timer cannot be used at the same time.**
***2. The simple timer will not operate when any of the following conditions is in effect.**
The timer is off; the system is in malfunction state; a test run is in progress; the remote controller is undergoing self-check or remote controller check; the user is in the process of selecting a function; the user is in the process of setting the timer; the system is under central control. (Under these conditions, On/Off operation is prohibited.)

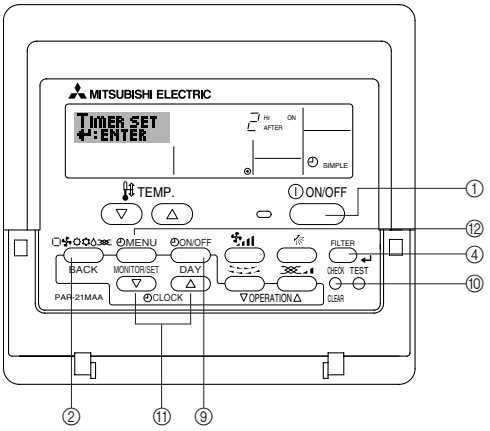

<How to Set the Simple Timer>

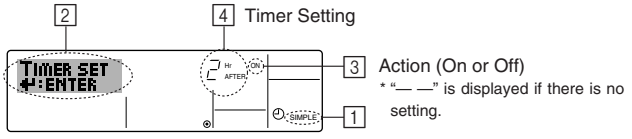

1. Be sure that you are at a standard control screen, and that the simple timer indicator is visible in the display (at 1).
   When something other than the Simple Timer is displayed, set it to SIMPLE TIMER using the function selection of remote controller (see 8.[4]–3 (3)) timer function setting.
2. Press the Timer Menu button ⑫, so that the "Set Up" appears on the screen (at 2). (Note that each press of the button toggles the display between "Set Up" and "Monitor".)
3. Press the ON/OFF button ① to display the current ON or OFF simple timer setting. Press the button once to display the time remaining to ON, and then again to display the time remaining to OFF. (The ON/OFF indication appears at 3).
   - "ON" timer:
     The air conditioner will start operation when the specified number of hours has elapsed.
   - "OFF" timer:
     The air conditioner will stop operation when the specified number of hours has elapsed.
4. With "ON" or "OFF" showing at 3: Press the appropriate Set Time button ⑪ as necessary to set the hours to ON (if "ON" is displayed) or the hours to OFF (if "OFF" is displayed) at 4.
   - Available Range: 1 to 72 hours
5. To set both the ON and OFF times, repeat Steps 3 and 4.
   * Note that ON and OFF times cannot be set to the same value.
6. To clear the current ON or OFF setting: Display the ON or OFF setting (see step 3) and then press the Check (Clear) button ⑩ so that the time setting clears to "—" at 4. (If you want to use only an ON setting or only an OFF setting, be sure that the setting you do not wish to use is shown as "—".)

7. After completing steps 3 to 6 above, press the Filter ↵ button ④ to lock in the value.

Note:
Your new settings will be cancelled if you press the Mode (Return) button ② before pressing the Filter ↵ button ④.

8. Press the Mode (Return) button ② to return to the standard control screen.
9. Press the Timer On/Off button ⑨ to start the timer countdown. When the timer is running, the timer value is visible on the display. **Be sure that the timer value is visible and appropriate.**

<Viewing the Current Simple Timer Settings>

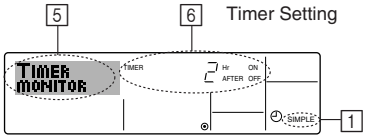

1. Be sure that the simple timer indicator is visible on the screen (at 1).
2. Press the Timer Menu button ⑫, so that the "Monitor" appears on the screen (at 5).
   - If the ON or OFF simple timer is running, the current timer value will appear at 6.
   - If ON and OFF values have both been set, the two values appear alternately.
3. Press the Mode (Return) button ② to close the monitor display and return to the standard control screen.

<To Turn Off the Simple Timer...>
Press the Timer On/Off button ⑨ so that the timer setting no longer appears on the screen (at 7).

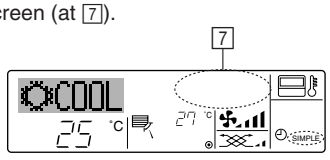

<To Turn On the Simple Timer...>
Press the Timer On/Off button ⑨ so that the timer setting becomes visible at 7.

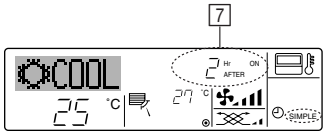

Examples
If ON and OFF times have both been set at the simple timer, operation and display are as indicated below.

Example 1:
Start the timer, with ON time set sooner than OFF time
ON Setting: 3 hours
OFF Setting: 7 hours

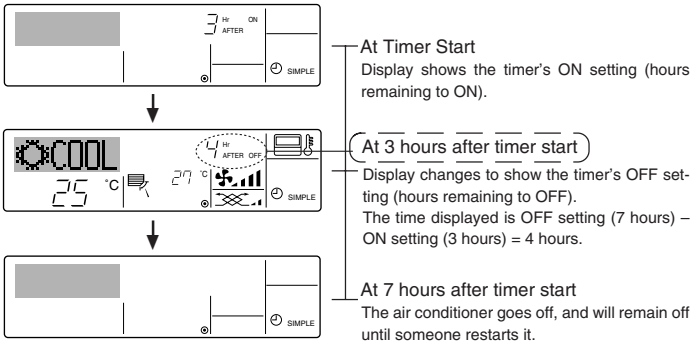

Example 2:
Start the timer, with OFF time is sooner than ON time
ON Setting: 5 hours
OFF Setting: 2 hours

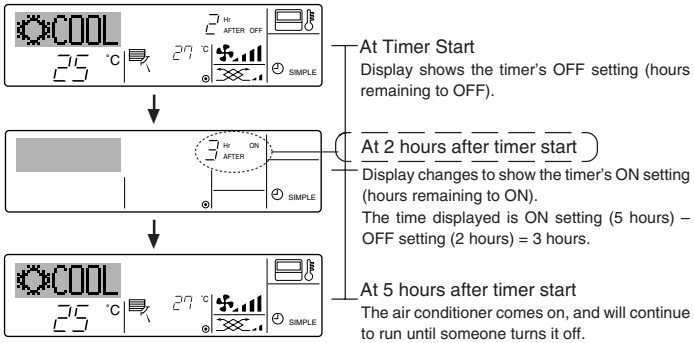

6.1.3. Auto Off Timer

■ This timer begins countdown when the air conditioner starts, and shuts the air conditioner off when the set time has elapsed.
■ Available settings run from 30 minutes to 4 hours, in 30-minute intervals.

Note:
***1. Weekly Timer/Simple Timer/Auto Off Timer cannot be used at the same time.**
***2. The Auto Off timer will not operate when any of the following conditions is in effect.**
The timer is off; the system is in malfunction state; a test run is in progress; the remote controller is undergoing self-check or remote controller check; the user is in the process of selecting a function; the user is in the process of setting the timer; the system is under central control. (Under these conditions, On/Off operation is prohibited.)

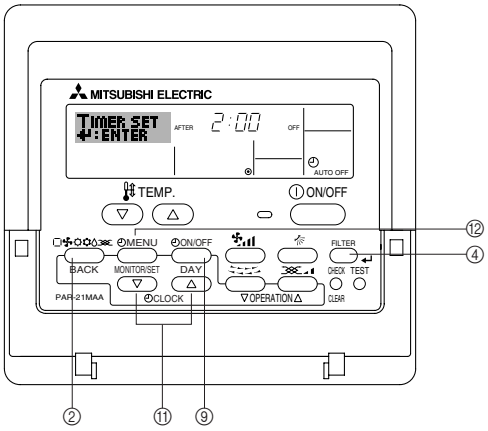

<How to Set the Auto Off Timer>

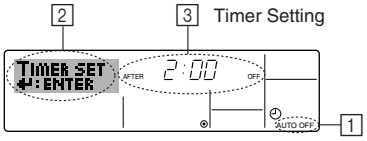

1. Be sure that you are at a standard control screen, and that the Auto Off timer indicator is visible in the display (at 1).
   When something other than the Auto Off Timer is displayed, set it to AUTO OFF TIMER using the function selection of remote controller (see 8.[4]–3 (3)) timer function setting.
2. Hold down the Timer Menu button ⑫ for **3 seconds**, so that the "Set Up" appears on the screen (at 2).
   (Note that each press of the button toggles the display between "Set Up" and "Monitor".)
3. Press the appropriate Set Time button ⑪ as necessary to set the OFF time (at 3).
4. Press the Filter ↵ button ④ to lock in the setting.

Note:
Your entry will be cancelled if you press the Mode (Return) button ② before pressing the Filter ↵ button ④.

5. Press the Mode (Return) button ② to complete the setting procedure and return to the standard control screen.
6. If the air conditioner is already running, the timer starts countdown immediately. **Be sure to check that the timer setting appears correctly on the display.**

6. Timer

<Checking the Current Auto Off Timer Setting>

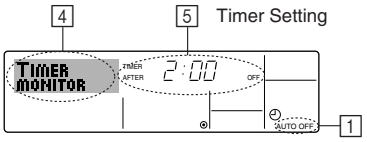

1. Be sure that the "Auto Off" is visible on the screen (at 1).
2. Hold down the Timer Menu button ⑫ for **3 seconds**, so that "Monitor" is indicated on the screen (at 4).
   - The timer remaining to shutdown appears at 5.
3. To close the monitor and return to the standard control screen, press the Mode (Return) button ②.

<To Turn Off the Auto Off Timer...>

● Hold down the Timer On/Off button ⑨ for **3 seconds**, so that "Timer Off" appears (at 6) and the timer value (at 7) disappears.

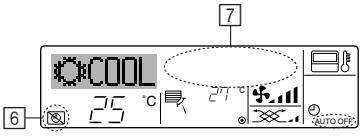

● Alternatively, turn off the air conditioner itself. The timer value (at 7) will disappear from the screen.

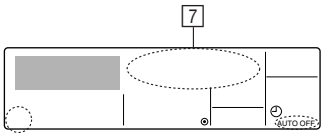

<To Turn On the Auto Off Timer...>

● Hold down the Timer On/Off button ⑨ for **3 seconds**. The "Timer Off" indication disappears (at 6), and the timer setting comes on the display (at 7).

● Alternatively, turn on the air conditioner. The timer value will appear at 7.

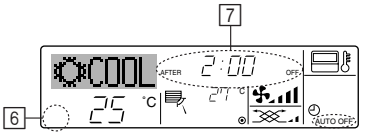

7. Other Functions

7.1. Locking the Remote Controller Buttons (Operation function limit controller)

■ If you wish, you can lock the remote controller buttons. You can use the Function Selection of remote controller to select which type of lock to use. (For information about selecting the lock type, see section 8, item [4]–2 (1)).
Specifically, you can use either of the following two lock types.

① Lock All Buttons:
Locks all of the buttons on the remote controller.

② Lock All Except ON/OFF:
Locks all buttons other than the ON/OFF button.

Note:
The "Locked" indicator appears on the screen to indicate that buttons are currently locked.

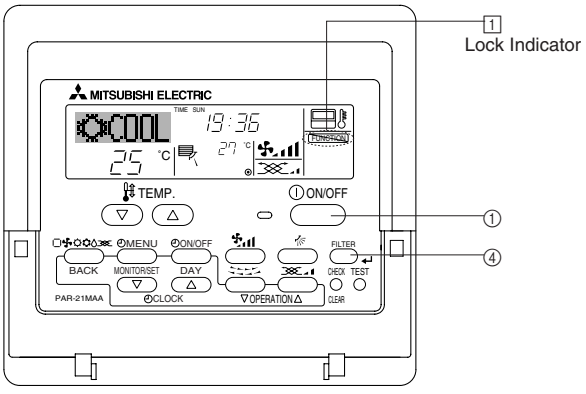

<How to Lock the Buttons>

1. While holding down the Filter button ④, press and hold down the ON/OFF button ① for 2 seconds. The "Locked" indication appears on the screen (at 1), indicating that the lock is now engaged.
   * If locking has been disabled in Function Selection of remote controller, the screen will display the "Not Available" message when you press the buttons as described above.

   - If you press a locked button, the "Locked" indication (at 1) will blink on the display.

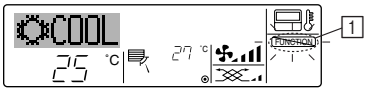

<How to Unlock the Buttons>

1. While holding down the Filter button ④, press and hold down the ON/OFF button ① for 2 seconds—so that the "Locked" indication disappears from the screen (at 1).

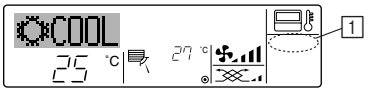

7. Other Functions

7.2. Error Codes indication

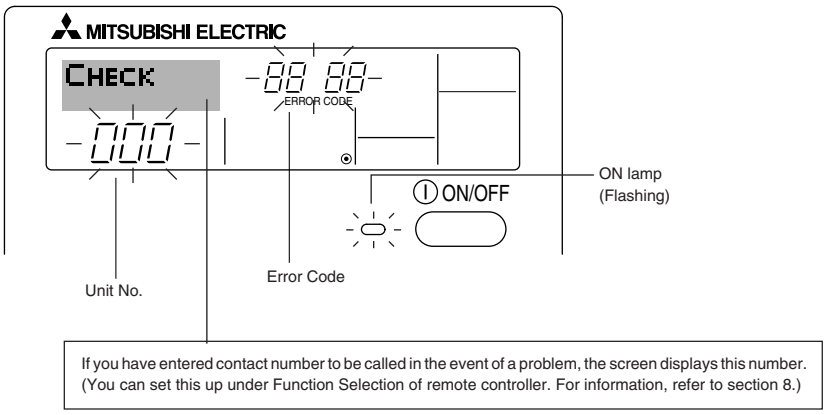

● If the ON lamp and error code are both flashing: This means that the air conditioner is out of order and operation has been stopped (and cannot resume). Take note of the indicated unit number and error code, then switch off the power to the air conditioner and call your dealer or servicer.

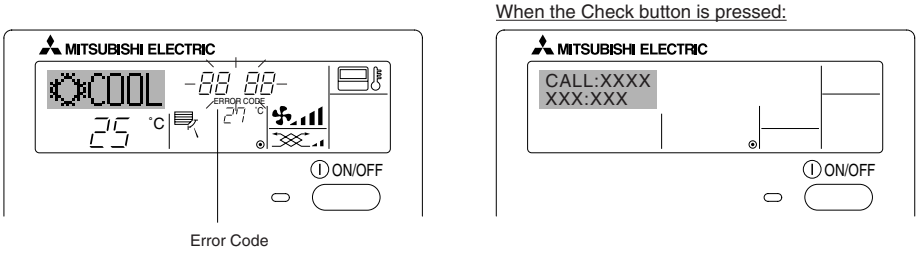

● If only the error code is flashing (while the ON lamp remains lit): Operation is continuing, but there may be a problem with the system. In this case, you should note down the error code and then call your dealer or servicer for advice.

* If you have entered contact number to be called in the event of a problem, push the Check button to display it on the screen. (You can set this up under Function Selection of remote controller. For information, refer to section 8.)

8. Function Selection

Function selection of remote controller

The setting of the following remote controller functions can be changed using the remote controller function selection mode. Change the setting when needed.

Item 1	Item 2	Item 3 (Setting content)
1. Change Language (“CHANGE LANGUAGE”)	Language setting to display	• Display in multiple languages is possible
2. Function limit (“FUNCTION SELECTION”)	(1) Operation function limit setting (operation lock) (“LOCKING FUNCTION”)	• Setting the range of operation limit (operation lock)
	(2) Use of automatic mode setting (“SELECT AUTO MODE”)	• Setting the use or non-use of “automatic” operation mode
	(3) Temperature range limit setting (“LIMIT TEMP FUNCTION”)	• Setting the temperature adjustable range (maximum, minimum)
3. Mode selection (“MODE SELECTION”)	(1) Remote controller main/sub setting (“CONTROLLER MAIN/SUB”)	• Selecting main or sub remote controller * When two remote controllers are connected to one group, one controller must be set to sub.
	(2) Use of clock setting (“CLOCK”)	• Setting the use or non-use of clock function
	(3) Timer function setting (“WEEKLY TIMER”)	• Setting the timer type
	(4) Contact number setting for error situation (“CALL.”)	• Contact number display in case of error • Setting the telephone number
4. Display change (“DISP MODE SETTING”)	(1) Temperature display °C/°F setting (“TEMP MODE °C/°F”)	• Setting the temperature unit (°C or °F) to display
	(2) Suction air temperature display setting (“ROOM TEMP DISP SELECT”)	• Setting the use or non-use of the display of indoor (suction) air temperature
	(3) Automatic cooling/heating display setting (“AUTO MODE DISP C/H”)	• Setting the use or non-use of the display of “Cooling” or “Heating” display during operation with automatic mode

[Function selection flowchart]
Setting language (English)

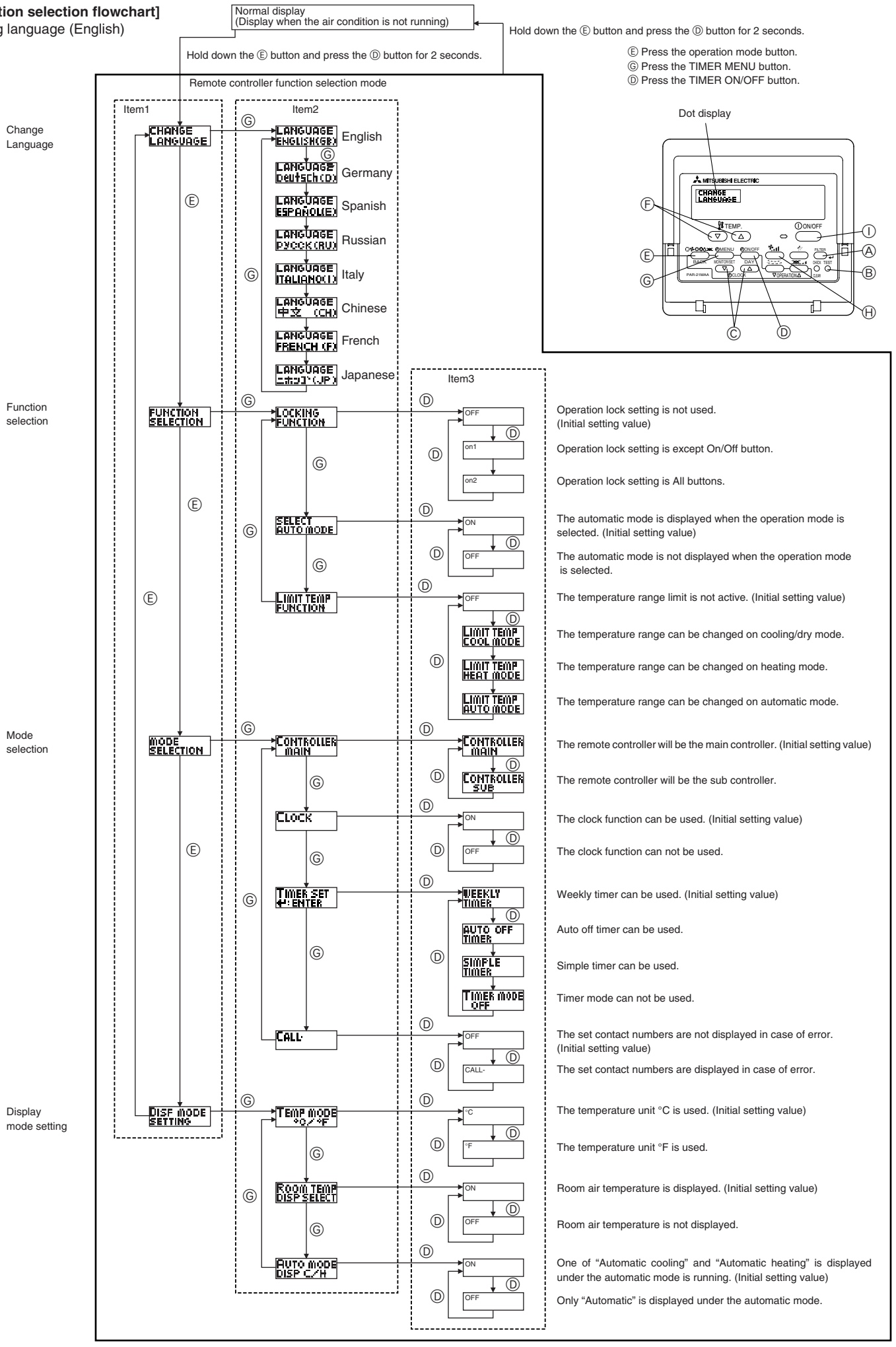

[Detailed setting]

[4]–1. CHANGE LANGUAGE setting

The language that appears on the dot display can be selected.

- Press the [◴MENU] button Ⓖ to change the language.
  ① English (GB), ② German (D), ③ Spanish (E), ④ Russian (RU), ⑤ Italian (I), ⑥ Chinese (CH), ⑦ French (F), ⑧ Japanese (JP)

Refer to the dot display table.

[4]–2. Function limit

(1) Operation function limit setting (operation lock)

- To switch the setting, press the [◴ON/OFF] button Ⓓ.
  ① no1: Operation lock setting is made on all buttons other than the [⏻ON/OFF] button.
  ② no2: Operation lock setting is made on all buttons.
  ③ OFF (Initial setting value): Operation lock setting is not made.

* To make the operation lock setting valid on the normal screen, it is necessary to press buttons (Press and hold down the [FILTER] and [⏻ON/OFF] buttons at the same time for two seconds.) on the normal screen after the above setting is made.

(2) Use of automatic mode setting

When the remote controller is connected to the unit that has automatic operation mode, the following settings can be made.

- To switch the setting, press the [◴ON/OFF] button Ⓓ.
  ① ON (Initial setting value):
  The automatic mode is displayed when the operation mode is selected.
  ② OFF:
  The automatic mode is not displayed when the operation mode is selected.

(3) Temperature range limit setting

After this setting is made, the temperature can be changed within the set range.

- To switch the setting, press the [◴ON/OFF] button Ⓓ.
  ① LIMIT TEMP COOL MODE:
  The temperature range can be changed on cooling/dry mode.
  ② LIMIT TEMP HEAT MODE:
  The temperature range can be changed on heating mode.
  ③ LIMIT TEMP AUTO MODE:
  The temperature range can be changed on automatic mode.
  ④ OFF (initial setting): The temperature range limit is not active.

* When the setting, other than OFF, is made, the temperature range limit setting on cooling, heating and automatic mode is made at the same time. However, the range cannot be limited when the set temperature range has not changed.

- To increase or decrease the temperature, press the [🌡TEMP. (▽) or (△)] button Ⓕ.
- To switch the upper limit setting and the lower limit setting, press the [📶] button Ⓗ. The selected setting will flash and the temperature can be set.
- Settable range
  Cooling/Dry mode:
  Lower limit:19°C ~ 30°C Upper limit:30°C ~ 19°C
  Heating mode:
  Lower limit:17°C ~ 28°C Upper limit:28°C ~ 17°C
  Automatic mode:
  Lower limit:19°C ~ 28°C Upper limit:28°C ~ 19°C

[4]–3. Mode selection setting

(1) Remote controller main/sub setting

- To switch the setting, press the [◴ON/OFF] button Ⓓ.
  ① Main: The controller will be the main controller.
  ② Sub: The controller will be the sub controller.

(2) Use of clock setting

- To switch the setting, press the [◴ON/OFF] button Ⓓ.
  ① ON: The clock function can be used.
  ② OFF: The clock function cannot be used.

(3) Timer function setting

- To switch the setting, press the [◴ON/OFF] button Ⓓ (Choose one of the following.).
  ① WEEKLY TIMER (initial setting value):
  The weekly timer can be used.
  ② AUTO OFF TIMER:
  The auto off timer can be used.
  ③ SIMPLE TIMER:
  The simple timer can be used.
  ④ TIMER MODE OFF:
  The timer mode cannot be used.

* When the use of clock setting is OFF, the "WEEKLY TIMER" cannot be used.

(4) Contact number setting for error situation

- To switch the setting, press the [◴ON/OFF] button Ⓓ.
  ① CALL OFF:
  The set contact numbers are not displayed in case of error.
  ② CALL **** *** ****:
  The set contact numbers are displayed in case of error.
  CALL_:
  The contact number can be set when the display is as shown on the left.
- Setting the contact numbers
  To set the contact numbers, follow the following procedures. Move the flashing cursor to set numbers. Press the [🌡TEMP. (▽) and (△)] button Ⓕ to move the cursor to the right (left). Press the [◴CLOCK (▽) and (△)] button Ⓒ to set the numbers.

[4]–4. Display change setting

(1) Temperature display °C/°F setting

- To switch the setting, press the [◴ ON/OFF] button Ⓓ.
  ① °C: The temperature unit °C is used.
  ② °F: The temperature unit °F is used.

(2) Suction air temperature display setting

- To switch the setting, press the [◴ON/OFF] button Ⓓ.
  ① ON: The suction air temperature is displayed.
  ② OFF: The suction air temperature is not displayed.

(3) Automatic cooling/heating display setting

- To switch the setting, press the [◴ON/OFF] button Ⓓ.
  ① ON:
  One of "Automatic cooling" and "Automatic heating" is displayed under the automatic mode is running.
  ② OFF:
  Only "Automatic" is displayed under the automatic mode.

[Dot display table]

Selecting language		English	Germany	Spanish	Russian	Italy	Chinese	French	Japanese
Waiting for start-up		PLEASE WAIT	←	←	←	←	←	←	←
Operation mode	Cool	COOL	Kühlen	FRÍO	Холод	COOL	制冷	FROID	冷房
	Dry	DRY	Trocknen	DESHUMIDIFICACION	Сушка	DRY	除湿	DESHU	ドライ
	Heat	HEAT	Heizen	CALOR	Тепло	HEAT	制热	CHAUD	暖房
	Auto	AUTO	AUTO	AUTOMÁTICO	Авто	AUTO	自动	AUTO	自動
	Auto(Cool)	COOL	Kühlen	FRÍO	Холод	COOL	制冷	FROID	冷房
	Auto(Heat)	HEAT	Heizen	CALOR	Тепло	HEAT	制热	CHAUD	暖房
	Fan	FAN	Lüfter	VENTILACIÓN	Вент	VENTILAZIONE	送风	VENTILATION	送風
	Ventilation	VENTILATION	Gebläse betrieb	VENTILACIÓN	Вентилляция	ARIA ESTERNA	换气	VENTILATION	換気
	Stand by (Hot adjust)	STAND BY	STAND BY	CALENTANDO	Обогрев: пауза	STAND BY	准备中	PRE CHAUFFAGE	準備中
	Defrost	DEFROST	Abtauen	DESCONGELACIÓN	Оттаивание	SBRINAMENTO	除霜中	DEGIVRAGE	霜取中
Set temperature		SET TEMP	TEMP einstellen	TEMP. CONSIGNA	Целевая температура	IMPOSTAZIONE TEMPERTURA	设定温度	REGLAGE TEMPERATURE	設定温度
Fan speed		FAN SPEED	Lüftergeschwindigkeit	VELOCIDAD VENTILADOR	Скорость вентилятора	VELOCITA' VENTILATORE	风速	VITESSE DE VENTILATION	風速
Not use button		NOT AVAILABLE	nicht Verfügbar	NO DISPONIBLE	Не доступно	NON DISPONIBILE	无效按钮	NON DISPONIBLE	無効ボタン
Check (Error)		CHECK	Prüfen	COMPROBAR	Проверка	CHECK	检查	CONTROLE	点検
Test run		TEST RUN	Testbetrieb	TEST FUNCIONAMIENTO	Тестовый запуск	TEST RUN	试运转	TEST	試ウンテン
Self check		SELF CHECK	selbst-diagnose	AUTO REVISIÓN	Самодиагностика	SELF CHECK	自我诊断	AUTO CONTROLE	自己シンダン
Unit function selection		FUNCTION SELECTION	Funktion auswahl	SELECCIÓN DE FUNCIÓN	Выбор функции	SELEZIONE FUNZIONI	功能选择	SELECTION FONCTIONS	キノウ選択
Setting of ventilation		SETTING OF VENTILATION	Lüfterstufen wählen	CONFIG. VENTILACIÓN	Настройка вентустан.	IMPOSTAZIONE ARIA ESTERNA	换气设定	SELECTION VENTILATION	換気設定

Selecting language	English	Germany	Spanish	Russian	Italy	Chinese	French	Japanese
CHANGE LANGUAGE	CHANGE LANGUAGE	←	←	←	←	←	←	←
Function selection	FUNCTION SELECTION	Funktion auswahlen	SELECCIÓN DE FUNCIONES	Выбор функции	SELEZIONE FUNZIONI	功能限制	SELECTION FONCTIONS	キノウ制限
Operation function limit setting	LOCKING FUNCTION	Sperr – Funktion	FUNCIÓN BLOQUEADA	Функция блокировки	BLOCCO FUNZIONI	操作限制	BLOCAGE FONCTIONS	操作モード
Use of automatic mode setting	SELECT AUTO MODE	Auswahl Auto Betrieb	SELECCIÓN MODO AUTO	Выбор режима АВТО	SELEZIONE MODO AUTO	自动模式	SELECTION DU MODE AUTO	自動モードショウ
Temperature range limit setting	LIMIT TEMP FUNCTION	Limit Temp Funktion	LÍMIT TEMP CONSIGNA	Ограничение уст. температ	LIMITAZIONE TEMPERATURA	温度限制	LIMITATION TEMPERATURE	温度制限
Limit temperature cooling/day mode	LIMIT TEMP COOL MODE	Limit Kühl Temp	LÍMIT TEMP MODO FRIO	Ограничено охлаждение	LIMITAZIONE MODO COOL	制冷范围	LIMITE TEMP MODE FROID	オッドイン冷房
Limit temperature heating mode	LIMIT TEMP HEAT MODE	Limit Heiz Temp	LÍMIT TEMP MODO CALOR	Ограничен обогрев	LIMITAZIONE MODO HEAT	制热范围	LIMITE TEMP MODE CHAUD	オッドイン暖房
Limit temperature auto mode	LIMIT TEMP AUTO MODE	Limit Auto Temp	LÍMIT TEMP MODO AUTO	Ограничен режим АВТО	LIMITAZIONE MODO AUTO	自动范围	LIMITE TEMP MODE AUTO	オッドイン自動
Mode selection	MODE SELECTION	Betriebsart wählen	SELECCIÓN DE MODO	Выбор режима	SELEZIONE MODO	基本模式	SELECTION DU MODE	基本キノウ
Remote controller setting MAIN	CONTROLLER MAIN	Haupt Controller	CONTROL PRINCIPAL	Основной пульт	CONTROLLO MAIN	遥控 主	TELECOMMANDE MAITRE	リモコン主従
Remote controller setting SUB	CONTROLLER SUB	Neben Controller	CONTROL SECUNDARIO	Дополнительный пульт	CONTROLLO SUB	遥控 辅	TELECOMMANDE ESCLAVE	リモコン主従
Use of clock setting	CLOCK	Uhr	RELOJ	Часы	OROLOGIO	时钟	AFFICHAGE HORLOGE	時計ショウ
Setting the day of the week and time	TIME SET ↵:ENTER	Uhr stellen ↵:einstellen	CONFIG RELOJ ↵:CONFIG	Часы: уст. ↵:ввод	OROLOGIO ↵:ENTER	时间 ↵:ENTER	HORLOGE ↵:ENTRER	トケイセッテイ ↵:カクテイ
Timer set	TIMER SET ↵:ENTER	Zeitschaltuhr ↵:einstellen	TEMPORIZADOR ↵:CONFIG	Таймер: уст. ↵:ввод	TIMER ↵:ENTER	定时器 ↵:ENTER	PROG HORAIRE ↵:ENTRER	タイマーセッテイ ↵:カクテイ
Timer monitor	TIMER MONITOR	Uhrzeit Anzeige	VISUALIZAR TEMPORIZAD.	Просмотр таймера	VISUALIZ TIMER	定时器状态	AFFICHAGE PROG HORAIRE	タイマーモニター
Weekly timer	WEEKLY TIMER	Wochenzeit Schalt Uhr	TEMPORIZADOR SEMANAL	Недельный таймер	TIMER SETTIMANALE	每周定时器	PROG HEBDOMADAIRE	タイマー週間
Timer mode off	TIMER MODE OFF	Zeitschaltuhr AUS	TEMPORIZADOR APAGADO	Таймер выкл.	TIMER OFF	定时器无效	PROG HORAIRE INACTIF	タイマー無効
Auto off timer	AUTO OFF TIMER	AUTO Zeit funktion aus	APAGADO AUTOMÁTICO	Автоотключ. по таймеру	AUTO OFF TIMER	解除定时	PROG HORAIRE ARRET AUTO	タイマーケシウスルボウシ
Simple timer	SIMPLE TIMER	Einfache Zeitfunktion	TEMPORIZADOR SIMPLE	Простой таймер	TIMER SEMPLIFICATO	简易定时器	PROG HORAIRE SIMPLIFIE	タイマーカンイ
Contact number setting of error situation	CALL	←	←	←	←	←	←	←
Display change	DISP MODE SETTING	Anzeige Betriebsart	MOSTRAR MODO	Настройка инд. режима	IMPOSTAZIONE MODO DISPLAY	转换表示	AFFICHAGE SOUS MENU	表示切替
Temperature display °C/°F setting	TEMP MODE °C/°F	Wechsel °C/°F	TEMP GRADOS °C/°F	Ед.изм.темпер. °C/°F	TEMPERATURA °C/°F	温度 °C/°F	TEMPERATURE °C/°F	温度 °C/°F
Room air temperature display setting	ROOM TEMP DISP SELECT	Raum Temp gewählt	MOSTRAR TEMP	Показывать темп. в комн.	TEMPERATURA AMBIENTE	吸入温度	TEMPERATURE AMBIANTE	スイコミオンドヒョウジ
Automatic cooling/heating display setting	AUTO MODE DISP C/H	Auto Betrieb C/H	MOSTRAR F/C EN AUTO	Инд. T/X в режиме АВТО	AUTO C/H	自动表示	AFFICHAGE AUTO F/C	自動レイダンヒョウジ

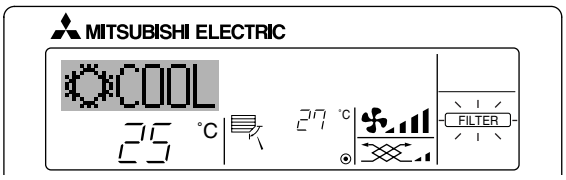

■ Indicates that the filter needs cleaning.
Clean the filter.

■ When resetting "FILTER" display
When the [FILTER] button is pressed two times successively after cleaning the filter, the display goes off and is reset.

Note:
- **When two or more different types of indoor unit are controlled, the cleaning period differs with the type of filter. When the master unit cleaning period arrives, "FILTER" is displayed. When the filter display goes off, the cumulative time is reset.**
- **"FILTER" indicates the cleaning period when the air conditioner was used under general indoor air conditions by criteria time. Since the degree of dirtiness depends on the environmental conditions, clean the filter accordingly.**
- **The filter cleaning period cumulative time differs with the model.**
- **This indication is not available for wireless remote controller.**

▶ Cleaning the filters
- Clean the filters using a vacuum cleaner. If you do not have a vacuum cleaner, tap the filters against a solid object to knock off dirt and dust.
- If the filters are especially dirty, wash them in lukewarm water. Take care to rinse off any detergent thoroughly and allow the filters to dry completely before putting them back into the unit.

⚠ Caution:
- **Do not dry the filters in direct sunlight or by using a heat source, such as an electric heater: this may warp them.**
- **Do not wash the filters in hot water (above 50°C), as this may warp them.**
- **Make sure that the air filters are always installed. Operating the unit without air filters can cause malfunction.**

⚠ Caution:
- **Before you start cleaning, stop operation and turn OFF the power supply.**
- **Indoor units are equipped with filters to remove the dust of sucked-in air. Clean the filters using the methods shown in the following sketches.**

▶ Filter removal

⚠ Caution:
- **In removing the filter, precautions must be taken to protect your eyes from dust. Also, if you have to climb up on a stool to do the job, be careful not to fall.**
- **When the filter is removed, do not touch the metallic parts inside the indoor unit, otherwise injury may result.**

■ **PLFY-P·VAM-E**

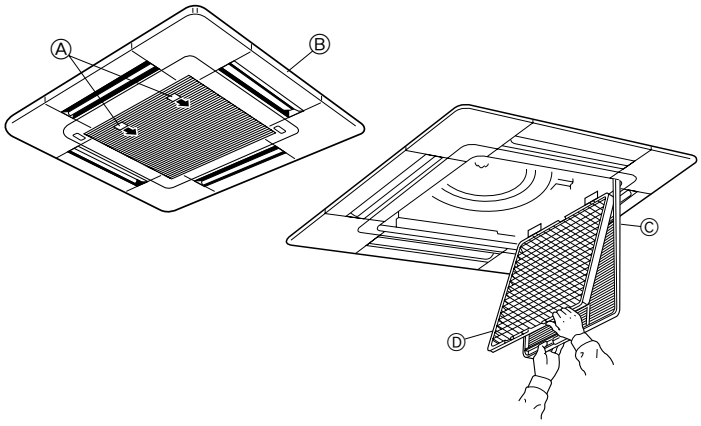

① Pull the knob on the intake grille in the direction indicated by the arrow and it should open.
② Open the intake grille.
③ Release the knob on the center edge of the intake grille and pull the filter forward to remove the filter.
Ⓐ Knob Ⓑ Grille Ⓒ Intake grille Ⓓ Filter

■ **PKFY-P·VAM-E**
PKFY-P·VGM-E

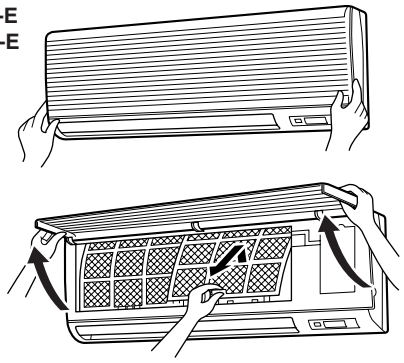

① Pull both the bottom corners of the intake grille to open the grille, then lift the filter.

■ **PKFY-P·VFM-E**

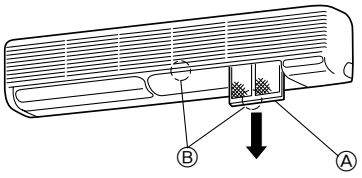

① Hold the filter lug (located at the bottom of the intake grille) and pull it out downward.
Ⓐ Filter
Ⓑ Lug
- To reinstall the filters, push the filter lug upward.

■ **PCFY-P·VGM-E**

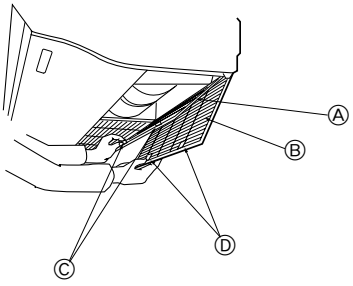

① Open the intake grille.
② Hold the knob on the filter then pull the filter up in the direction of an arrow. To replace the filter after cleaning, be sure to insert the filter far enough until it fits into the stopper.
Ⓐ Filter Ⓑ Intake Grille Ⓒ Knob Ⓓ Stopper

■ **PMFY-P·VBM-E**

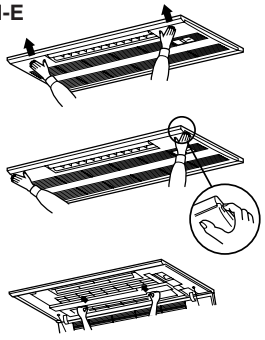

① Pressing the PUSH button on the outer side of the intake grille causes the intake grille to open.
② A filter with an intake grille on it can be removed by pulling the filter forward.

9. Care and Cleaning

■ **PFFY-P·VKM-E**

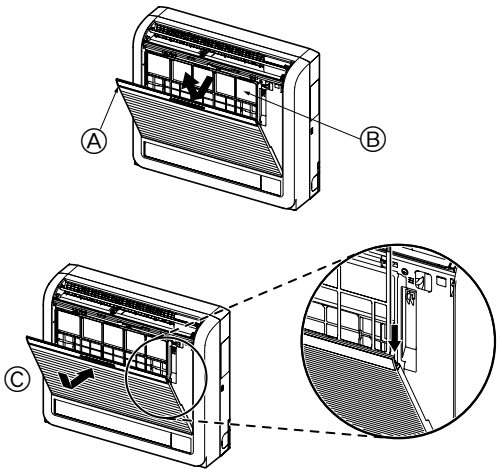

■ **PFFY-P·VKM-E**

① Remove the catechin air filter.
Ⓐ Open the front grille
Ⓑ Catechin air filter

⚠ **Caution:**
When the catechin air filter is to be removed, do not touch the metal parts of the indoor unit.
This may cause an injury.

② Install the catechin air filter.
Be sure to install its both ends into the tabs as shown.
Ⓒ Install.
③ Securely close the front grille.

10. Trouble Shooting

Having trouble?	Here is the solution. (Unit is operating normally.)
Air conditioner does not heat or cool well.	■ Clean the filter. (Airflow is reduced when the filter is dirty or clogged.) ■ Check the temperature adjustment and adjust the set temperature. ■ Make sure that there is plenty of space around the outdoor unit. Is the indoor unit air intake or outlet blocked? ■ Has a door or window been left open?
When heating operation starts, warm air does not blow from the indoor unit soon.	■ Warm air does not blow until the indoor unit has sufficiently warmed up.
During heating mode, the air conditioner stops before the set room temperature is reached.	■ When the outdoor temperature is low and the humidity is high, frost may form on the outdoor unit. If this occurs, the outdoor unit performs a defrosting operation. Normal operation should begin after approximately 10 minutes.
Airflow direction changes during operation or airflow direction cannot be set.	■ During cooling mode, the vanes automatically move to the horizontal (down) position after 1 hour when the down (horizontal) airflow direction is selected. This is to prevent water from forming and dripping from the vanes. ■ During heating mode, the vanes automatically move to the horizontal airflow direction when the airflow temperature is low or during defrosting mode.
When the airflow direction is changed, the vanes always move up and down past the set position before finally stopping at the position.	■ When the airflow direction is changed, the vanes move to the set position after detecting the base position.
A flowing water sound or occasional hissing sound is heard.	■ These sounds can be heard when refrigerant is flowing in the air conditioner or when the refrigerant flow is changing.
A cracking or creaking sound is heard.	■ These sounds can be heard when parts rub against each due to expansion and contraction from temperature changes.
The room has an unpleasant odor.	■ The indoor unit draws in air that contains gases produced from the walls, carpeting, and furniture as well as odors trapped in clothing, and then blows this air back into the room.
A white mist or vapor is emitted from the indoor unit.	■ If the indoor temperature and the humidity are high, this condition may occur when operation starts. ■ During defrosting mode, cool airflow may blow down and appear like a mist.
Water or vapor is emitted from the outdoor unit.	■ During cooling mode, water may form and drip from the cool pipes and joints. ■ During heating mode, water may form and drip from the heat exchanger. ■ During defrosting mode, water on the heat exchanger evaporates and water vapor may be emitted.
The operation indicator does not appear in the remote controller display.	■ Turn on the power switch. "◉" will appear in the remote controller display.
The air conditioner does not operate even though the ON/OFF button is pressed. The operation mode display on the remote controller disappears.	■ Is the power switch of the indoor unit turned off? Turn on the power switch.
"⊠" appears in the remote controller display.	■ During central control, "⊠" appears in the remote controller display and air conditioner operation cannot be started or stopped using the remote controller.

10. Trouble Shooting

Having trouble?	Here is the solution. (Unit is operating normally.)
When restarting the air conditioner soon after stopping it, it does not operate even though the ON/OFF button is pressed.	■ Wait approximately three minutes. (Operation has stopped to protect the air conditioner.)
Air conditioner operates without the ON/OFF button being pressed.	■ Is the on timer set? Press the ON/OFF button to stop operation. ■ Is the air conditioner connected to a central remote controller? Consult the concerned people who control the air conditioner. ■ Does "⊠" appear in the remote controller display? Consult the concerned people who control the air conditioner. ■ Has the auto recovery feature from power failures been set? Press the ON/OFF button to stop operation.
Air conditioner stops without the ON/OFF button being pressed.	■ Is the off timer set? Press the ON/OFF button to restart operation. ■ Is the air conditioner connected to a central remote controller? Consult the concerned people who control the air conditioner. ■ Does "⊠" appear in the remote controller display? Consult the concerned people who control the air conditioner.
Remote controller timer operation cannot be set.	■ Are timer settings invalid? If the timer can be set, (WEEKLY), (SIMPLE), or (AUTO OFF) appears in the remote controller display.
"PLEASE WAIT" appears in the remote controller display.	■ The initial settings are being performed. Wait approximately 3 minutes.
An error code appears in the remote controller display.	■ The protection devices have operated to protect the air conditioner. ■ Do not attempt to repair this equipment by yourself. Turn off the power switch immediately and consult your dealer. Be sure to provide the dealer with the model name and information that appeared in the remote controller display.
Draining water or motor rotation sound is heard.	■ When cooling operation stops, the drain pump operates and then stops. Wait approximately 3 minutes.
Noise is louder than specifications.	■ The indoor operation sound level is affected by the acoustics of the particular room as shown in the following table and will be higher than the noise specification, which was measured in an echo-free room. [table below]
Nothing appears in the wireless remote controller display, the display is faint, or signals are not received by the indoor unit unless the remote controller is close.	■ The batteries are low. Replace the batteries and press the Reset button. ■ If nothing appears even after the batteries are replaced, make sure that the batteries are installed in the correct directions (+, –).
The operation lamp near the receiver for the wireless remote controller on the indoor unit is flashing.	■ The self diagnosis function has operated to protect the air conditioner. ■ Do not attempt to repair this equipment by yourself. Turn off the power switch immediately and consult your dealer. Be sure to provide the dealer with the model name.
Warm air blows from the indoor unit intermittently when heating mode is off or during fan mode.	■ When another indoor unit is operating in heating mode, the control valve opens and closes occasionally to maintain stability in the air conditioning system. This operation will stop after a while. * If this will cause an undesirable rise in the room temperature in small rooms, etc., stop the operation of the indoor unit temporarily.
The damper opens and closes automatically. (For PFFY-P·VKM-E series)	■ The damper is automatically controlled by a microcomputer according to the air flow temperature and operation time of the air conditioner.

	High sound-absorbing rooms	Normal rooms	Low sound-absorbing rooms
Location examples	Broadcasting studio, music room, etc.	Reception room, hotel lobby, etc.	Office, hotel room
Noise levels	3 to 7 dB	6 to 10 dB	9 to 13 dB

▶ Air outlet control (PFFY-P·VKM series)

This unit is automatically controlled that air comes out simultaneously from the upper and lower air outlets so that the room can be cooled or heated effectively.

Description of operation

Operation	COOL		DRY	HEAT		FAN
Air flow	Upper and lower air flow	Upper air flow	Upper air flow only	Upper and lower air flow	Upper air flow	Upper and lower air flow
Conditions	Room temperature and set temperature are different.	Room temperature is close to set temperature or thermo-off.	—	(Normal condition (in heating))	During defrosting operation, start of operation, thermo-off	—

- Be sure to keep the area around the damper of the lower air outlet free of any objects.
  This unit can be set to blow out air from the upper air outlet only by changing the switch setting on the address board (ask the dealer).

Range of application

The range of working temperatures for both the indoor and outdoor units of the series Y, R2, Multi-S is as below.

⚠ **Caution:**

The use of your air conditioner outside the range of working temperature and humidity can result in serious failure.

Mode	Indoor unit	Outdoor unit		
		PUHY	PURY	PUMY
Cooling	15 °C - 24 °C WB	–5 °C - 43 °C DB	–5 °C - 43 °C DB	–5 °C - 46 °C DB
Heating	15 °C - 27 °C DB	–15 °C - 15.5 °C WB	–12 °C - 15 °C WB	–12 °C - 15.5 °C WB

Note: As an applicable humidity standard for both indoors and outdoors, we recommend use within a range of 30 - 80% relative humidity.

⚠ **Warning:**

If the air conditioner operates but does not cool or heat (depending on model) the room, consult your dealer since there may be a refrigerant leak. Be sure to ask the service representative whether there is refrigerant leakage or not when repairs are carried out.

The refrigerant charged in the air conditioner is safe. Refrigerant normally does not leak, however, if refrigerant gas leaks indoors, and comes into contact with the fire of a fan heater, space heater, stove, etc., harmful substances will be generated.

11. Specifications

■ PLFY-P·VAM-E Series

Model		P32	P40	P50	P63	P80	P100	P125
Power source (Voltage<V>/Frequency)	<Hz>	~N/220-230-240/50, 220/60						
Capacity (Cooling/Heating)	<kW>	3.6/4.0	4.5/5.0	5.6/6.3	7.1/8.0	9.0/10.0	11.2/12.5	14.0/16.0
Dimension (Height)	<mm>	258 (30)					298 (30)	
Dimension (Width)	<mm>	840 (950)						
Dimension (Depth)	<mm>	840 (950)						
Net weight	<kg>	22 (5)			24 (5)		32(5)	
Fan Airflow rate (Low-Middle2-Middle1-High)	<m³/min>	11-12-13-14	12-13-14-16		14-15-16-18	16-18-20-22	19-22-25-27	21-24-27-29
Noise level (Low-Middle2-Middle1-High)	<dB>	27-28-29-31	27-28-30-32		28-29-31-33	30-32-35-37	33-36-39-41	35-38-41-43

*1 Cooling/Heating capacity indicates the maximum value at operation under the following condition.
Cooling: Indoor 27 °C DB/19 °C WB, Outdoor 35 °C DB
Heating: Indoor 20 °C DB, Outdoor 7 °C DB/6 °C WB
*2 This figure ( ) indicates panel's.

■ PCFY-P·VGM-E Series

Model		P40	P63	P100	P125
Power source (Voltage<V>/Frequency)	<Hz>	~N/220-230-240/50, 220/60			
Capacity (Cooling/Heating)	<kW>	4.5/5.0	7.1/8.0	11.2/12.5	14.0/16.0
Dimension (Height)	<mm>	210		270	
Dimension (Width)	<mm>	1000	1310		1620
Dimension (Depth)	<mm>	680			
Net weight	<kg>	27	34	37	43
Fan Airflow rate (Low-Middle2-Middle1-High)	<m³/min>	8-10-11-12	12-14-16-18	18-20-23-25	26-28-32-35
Noise level (Low-Middle2-Middle1-High)	<dB>	29-33-36-38	32-34-37-39	36-38-41-43	37-39-42-44

*1 Cooling/Heating capacity indicates the maximum value at operation under the following condition.
Cooling: Indoor 27 °C DB/19 °C WB, Outdoor 35 °C DB
Heating: Indoor 20 °C DB, Outdoor 7 °C DB/6 °C WB

■ PKFY-P·VAM-E Series ■ PKFY-P·VGM-E Series ■ PKFY-P·VFM-E Series

Model		P20	P25	P32	P40	P50	P63	P100
Power source (Voltage<V>/Frequency)	<Hz>	~N/220-230-240/50, 220/60						
Capacity (Cooling/Heating)	<kW>	2.2/2.5	2.8/3.2	3.6/4.0	4.5/5.0	5.6/6.3	7.1/8.0	11.2/12.5
Dimension (Height)	<mm>	295		340			340	
Dimension (Width)	<mm>	815		990			1400	1680
Dimension (Depth)	<mm>	158		235			235	
Net weight	<kg>	8.5		16			24	28
Fan Airflow rate (Low-Middle2-Middle1-High)	<m³/min>	4.9-5.2-5.6-5.9		8-9.5-10.5-11.5		9-10-11-12	15-20	22-28
Noise level (Low-Middle2-Middle1-High)	<dB>	32-33-35-36		33-36-38-41		34-37-40-43	39-45	41-46

*1 Cooling/Heating capacity indicates the maximum value at operation under the following condition.
Cooling: Indoor 27 °C DB/19 °C WB, Outdoor 35 °C DB
Heating: Indoor 20 °C DB, Outdoor 7 °C DB/6 °C WB

■ PMFY-P·VBM-E Series

Model		P20	P25	P32	P40
Power source (Voltage<V>/Frequency)	<Hz>	~N/220-230-240/50, 220/60			
Capacity (Cooling/Heating)	<kW>	2.2/2.5	2.8/3.2	3.6/4.0	4.5/5.0
Dimension (Height)	<mm>	230 (30)			
Dimension (Width)	<mm>	854 (1000)			
Dimension (Depth)	<mm>	395 (470)			
Net weight	<kg>	14 (3.0)			
Fan Airflow rate (Low-Middle2-Middle1-High)	<m³/min>	6.5-7.2-8.0-8.6	7.3-8.0-8.6-9.3		7.7-8.7-9.7-10.7
Noise level (Low-Middle2-Middle1-High)	<dB>	27-30-33-36	32-34-36-37		33-35-37-39

*1 Cooling/Heating capacity indicates the maximum value at operation under the following condition.
Cooling: Indoor 27 °C DB/19 °C WB, Outdoor 35 °C DB
Heating: Indoor 20 °C DB, Outdoor 7 °C DB/6 °C WB
*2 This figure ( ) indicates panel's.

■ PFFY-P·VKM-E Series

Model		P20	P25	P32	P40
Power source (Voltage<V>/Frequency)	<Hz>	~N/220-230-240/50			
Capacity (Cooling/Heating)	<kW>	2.2/2.5	2.8/3.2	3.6/4.0	4.5/5.0
Dimension (Height)	<mm>	600			
Dimension (Width)	<mm>	700			
Dimension (Depth)	<mm>	200			
Net weight	<kg>	14			
Fan Airflow rate (Low-Middle2-Middle1-High)	<m³/min>	5.9-6.8-7.6-8.7	6.1-7.0-8.0-9.1		8.0-9.0-9.5-10.7
Noise level (Low-Middle2-Middle1-High)	<dB>	27-31-34-37	28-32-35-38		35-38-42-44

*1 Cooling/Heating capacity indicates the maximum value at operation under the following condition.
Cooling: Indoor 27 °C DB/19 °C WB, Outdoor 35 °C DB
Heating: Indoor 20 °C DB, Outdoor 7 °C DB/6 °C WB

This product is designed and intended for use in the residential, commercial and light-industrial environment.

The product at hand is based on the following EU regulations:

- Low Voltage Directive 73/23/ EEC
- Electromagnetic Compatibility Directive 89/336/ EEC

Please be sure to put the contact address/telephone number on this manual before handing it to the customer.

MITSUBISHI ELECTRIC CORPORATION
HEAD OFFICE: TOKYO BLDG., 2-7-3, MARUNOUCHI, CHIYODA-KU, TOKYO 100-8310, JAPAN

BG79U322H04

Printed in Japan