Changes for the Better

MITSUBISHI ELECTRIC

SPLIT-TYPE, HEAT PUMP AIR CONDITIONERS
SPLIT-TYPE, AIR CONDITIONERS

August 2005

No.OC336

SERVICE MANUAL

R407C

Outdoor unit
[model names]

PUH-P25VGAA	
PUH-P35VGAA	PU-P35VGAA
PUH-P35YGAA	PU-P35YGAA
PUH-P50VGAA	PU-P50VGAA
PUH-P50YGAA	PU-P50YGAA
PUH-P60VGAA	PU-P60VGAA
PUH-P60YGAA	PU-P60YGAA
PUH-P71VGAA	PU-P71VGAA
PUH-P71YGAA	PU-P71YGAA
PUH-P100VGAA	PU-P100VGAA
PUH-P100YGAA	PU-P100YGAA
PUH-P125YGAA	PU-P125YGAA
PUH-P140YGAA	PU-P140YGAA

[Service Ref.]
Service Ref. is on page 2.

- This manual describes only service data of the outdoor units.

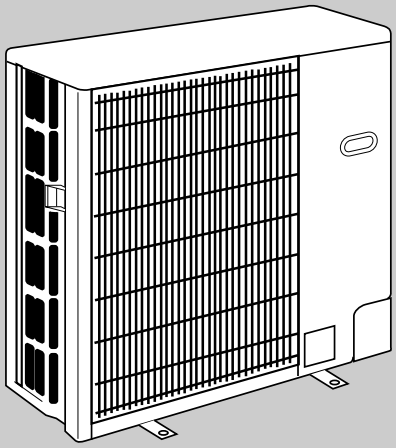

CONTENTS

Mr.SLIM™

[Service Ref.]

PUH-P25VGAA.UK	
PUH-P35VGAA.UK	PU-P35VGAA.UK
PUH-P35YGAA.UK	PU-P35YGAA.UK
PUH-P50VGAA.UK	PU-P50VGAA.UK
PUH-P50YGAA.UK	PU-P50YGAA.UK
PUH-P60VGAA.UK	PU-P60VGAA.UK
PUH-P60YGAA.UK	PU-P60YGAA.UK
PUH-P71VGAA.UK	PU-P71VGAA.UK
PUH-P71YGAA.UK	PU-P71YGAA.UK
PUH-P100VGAA.UK	PU-P100VGAA.UK
PUH-P100YGAA.UK	PU-P100YGAA.UK
PUH-P125YGAA.UK	PU-P125YGAA.UK
PUH-P140YGAA.UK	PU-P140YGAA.UK

1 REFERENCE MANUAL

1-1. INDOOR UNIT'S SERVICE MANUAL

Model name	Service Ref.	Service Manual No.
PLA-RP35/50/60/71AA PLA-RP100/125/140AA PLH-P35/50/60/71AAH PLH-P100/125/140AAH	PLA-RP35/50/60/71AA.UK PLA-RP100/125/140AA.UK PLH-P35/50/60/71AAH.UK PLH-P100/125/140AAH.UK	OC335
PMH-P25/35/50BA	PMH-P25/35/50BA	OC333
PCA-RP50/60/71/100/125/140GA PCH-P50/60/71/100/125/140GAH	PCA-RP50/60/71/100/125/140GA PCH-P50/60/71/100/125/140GAH	OC328
PCA-RP71/125HA	PCA-RP71/125HA	OC329
PKA-RP35/50GAL PKH-P35/50GALH	PKA-RP35/50GAL PKH-P35/50GALH	OC330
PKA-RP60/71/100FAL PKH-P60/71/100FALH	PKA-RP60/71/100FAL PKH-P60/71/100FALH	OC331
PSA-RP71/100/125/140GA PSH-P71/100/125/140GAH	PSA-RP71/100/125/140GA PSH-P71/100/125/140GAH	OC332
PEAD-RP35/50/60/71EA PEAD-RP100/125/140EA	PEAD-RP35/50/60/71EA.UK PEAD-RP100/125/140EA.UK	-
PEHD-P35/50/60/71EAH PEHD-P100/125/140EAH	PEHD-P35/50/60/71EAH.UK PEHD-P100/125/140EAH.UK	-
PEAD-RP60/71/100GA	PEAD-RP60/71/100GA.UK	-

1-2. TECHNICAL DATA BOOK

Manual No.OCS02

2 SAFETY PRECAUTION

CAUTIONS RELATED TO NEW REFRIGERANT

Cautions for units utilising refrigerant R407C

Do not use the existing refrigerant piping.

The old refrigerant and lubricant in the existing piping contains a large amount of chlorine which may cause the lubricant deterioration of the new unit.

Use "low residual oil piping"

If there is a large amount of residual oil (hydraulic oil, etc.) inside the piping and joints, deterioration of the lubricant will result.

Store the piping to be used during installation indoors with keep both ends sealed until just before brazing.
(Store elbows and other joints in a plastic bag.)

If dust, dirt, or water enters the refrigerant cycle, deterioration of the oil and compressor trouble may result.

Use ESTER , ETHER or HAB as the lubricant to coat flares and flange connection parts.

If large amount of mineral oil enter, that can cause deterioration of refrigerant oil etc.

Use liquid refrigerant to charge the system.

If gas refrigerant is used to seal the system, the composition of the refrigerant in the cylinder will change and performance may drop.

Do not use a refrigerant other than R407C.

If another refrigerant (R22, etc.) is used, the chlorine in the refrigerant may cause the lubricant deterioration.

Use a vacuum pump with a reverse flow check valve.

The vacuum pump oil may flow back into the refrigerant cycle and cause the lubricant deterioration.

Ventilate the room if refrigerant leaks during operation. If refrigerant comes into contact with a flame, poisonous gases will be released.

[1] Cautions for service

·After recovering the all refrigerant in the unit, proceed to working.
·Do not release refrigerant in the air.
·After completing the repair service, recharge the cycle with the specified amount of liquid refrigerant.

[2] Refrigerant recharging

(1) Refrigerant recharging process

①Direct charging from the cylinder.
·R407C cylinder are available on the market has a syphon pipe.
·Leave the syphon pipe cylinder standing and recharge it.
(By liquid refrigerant)

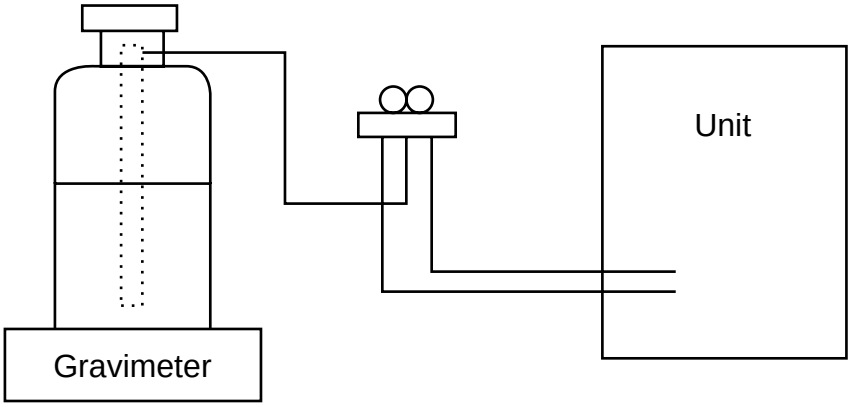

(2) Recharge in refrigerant leakage case

·After recovering the all refrigerant in the unit, proceed to working.
·Do not release the refrigerant in the air.
·After completing the repair service, recharge the cycle with the specified amount of liquid refrigerant.

[3] Service tools

Use the below service tools as exclusive tools for R407C refrigerant.

No.	Tool name	Specifications
①	Gauge manifold	·Only for R407C.
		·Use the existing fitting SPECIFICATIONS. (UNF7/16)
		·Use high-tension side pressure of 3.43MPa·G or over.
②	Charge hose	·Only for R407C.
		·Use pressure performance of 5.10MPa·G or over.
③	Electronic scale	
④	Gas leak detector	·Use the detector for R134a or R407C.
⑤	Adapter for reverse flow check.	·Attach on vacuum pump.
⑥	Refrigerant charge base.	
⑦	Refrigerant cylinder.	·For R407C ·Top of cylinder (Brown) ·Cylinder with syphon
⑧	Refrigerant recovery equipment.	

3 PART NAMES AND FUNCTIONS

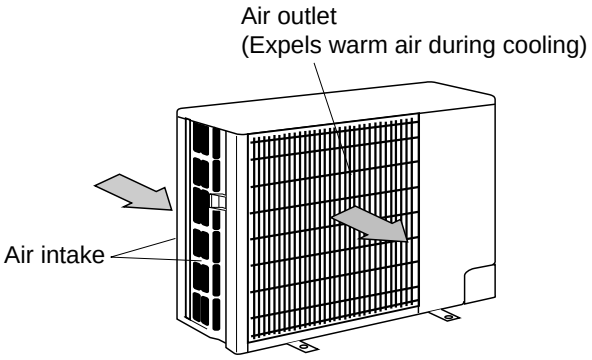

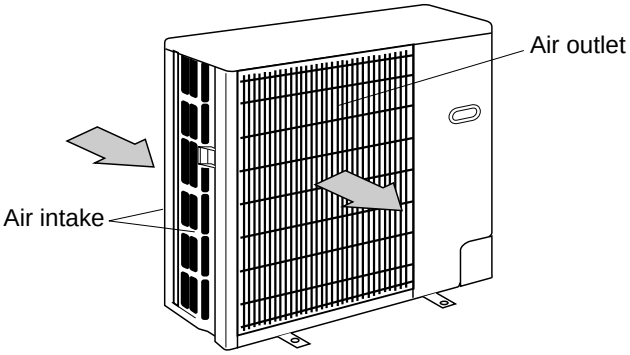

PUH-P25VGAA.UK
PUH-P35VGAA.UK
PUH-P35YGAA.UK

PU-P35VGAA.UK
PU-P35YGAA.UK

PUH-P50VGAA.UK
PUH-P60VGAA.UK
PUH-P71VGAA.UK

PU-P50VGAA.UK
PU-P60VGAA.UK
PU-P71VGAA.UK

PUH-P50YGAA.UK
PUH-P60YGAA.UK
PUH-P71YGAA.UK

PU-P50YGAA.UK
PU-P60YGAA.UK
PU-P71YGAA.UK

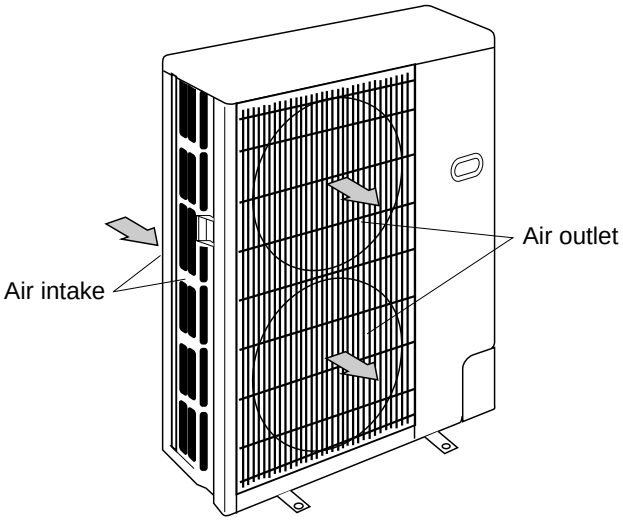

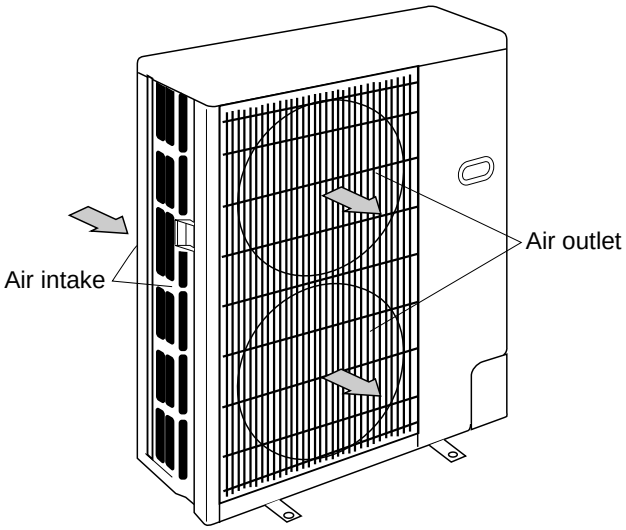

PUH-P100VGAA.UK
PUH-P100YGAA.UK

PU-P100VGAA.UK
PU-P100YGAA.UK

PUH-P125YGAA.UK
PUH-P140YGAA.UK

PU-P125YGAA.UK
PU-P140YGAA.UK

CHARGELESS SYSTEM
PRE-CHARGED REFRIGERANT IS SUPPLIED FOR PIPING LENGTH AT SHIPMENT.
PU/PUH-P25, P35, P50, P60 : max 20m
PU/PUH-P71, P100, P125, P140 : max 30m

The refrigerant circuit with LEV(Linear Expansion Valve) and a large accumulator always control the optimal refrigerant level regardless of the length (20/30m max. and 5m min.) of piping. The additional refrigerant charging work during installation often causes problems. Heretofore it is completely eliminated. This unique system improves the quality and reliability of the work done.It also helps to speed up the installation time.

4 SPECIFICATIONS

4-1. HEAT PUMP

	Service Ref.			PUH-P25VAA.UK		PUH-P35VGAA / YGAA.UK	
OUTDOOR UNIT	Mode			Cooling	Heating	Cooling	Heating
	Power supply (phase, cycle, voltage)			Single,50Hz,230V		Single,50Hz,230V / 3-ph,50Hz,400V	
		Running current	A	5.32	4.89	7.61 / 2.54	7.85 / 2.62
		Max current	A	7.23		10.67/5.4	
	External finish			Munsell 5Y 7/1			
	Refrigerant control			Linear Expansion Valve			
	Compressor			Hermetic			
		Model		RE189VHSMT		RE277VHSMT/RE277YFKM	
		Motor output	kW	0.9		1.3	
		Starter type		Line start			
		Protection devices		Internal thermostat HP switch Discharge thermo		Internal thermostat / Thermal relay HP switch / HP switch Discharge thermo / Discharge thermo	
		Crankcase heater	W	30			
	Heat exchanger			Plate fin coil			
	Fan	Fan(drive) × No.		Propeller (direct) × 1			
		Fan motor output	kW	0.07			
		Airflow	m³/min(CFM)	45(1,590)		45(1,590)	
	Defrost method			Reverse cycle			
	Noise level	Cooling	dB	46		47	
		Heating	dB	48		49	
	Dimensions	W	mm(in.)	900(35-7/16)			
		D	mm(in.)	330+20(13+3/4)			
		H	mm(in.)	650(25-5/8)			
	Weight		kg(lbs)	50(110)		54(119)	
	Refrigerant			R407C			
		Charge	kg(lbs)	1.7(3.8)		2.5(5.5)	
		Oil (Model)	L	0.57(Ester)MEL56			
REFRIGERANT PIPING	Pipe size O.D.	Liquid	mm(in.)	6.35(1/4)		9.52(3/8)	
		Gas	mm(in.)	12.7(1/2)		15.88(5/8)	
	Connection method	Indoor side		Flared			
		Outdoor side		Flared			
	Between the indoor & outdoor unit	Height difference		Max. 30m		Max. 40m	
		Piping length		Max. 30m		Max. 40m	

	Service Ref.			PUH-P50VGAA / YGAA.UK		PUH-P60VGAA / YGAA.UK	
OUTDOOR UNIT	Mode			Cooling	Heating	Cooling	Heating
	Power supply (phase, cycle, voltage)			Single, 50Hz, 230V / 3-ph, 50Hz,400V(4wires)			
		Running current	A	10.97 / 3.98	11.30 / 3.95	13.27 / 4.43	12.84/ 4.29
		Max current	A	15.35 /7.0		18.03 / 7.7	
	External finish			Munsell 5Y 7/1			
	Refrigerant control			Linear Expansion Valve			
	Compressor			Hermetic			
		Model		NE36VMJMT / NE36YEKMT		NE41VMJMT / NE41YEKMT	
		Motor output	kW	1.6		1.9	
		Starter type		Line start			
		Protection devices		Internal thermostat / Thermal relay HP switch / HP switch Discharge thermo / Discharge thermo			
		Crankcase heater	W	38			
	Heat exchanger			Plate fin coil			
	Fan	Fan(drive) × No.		Propeller (direct) × 1			
		Fan motor output	kW	0.07			
		Airflow	m³/min(CFM)	55(1,940)		50(1,770)	
	Defrost method			Reverse cycle			
	Noise level	Cooling	dB	48			
		Heating	dB	49		50	
	Dimensions	W	mm(in.)	900(35-7/16)			
		D	mm(in.)	330+20(13+3/4)			
		H	mm(in.)	855(33-5/8)			
	Weight		kg(lbs)	74(163)		79(174)	
	Refrigerant			R407C			
		Charge	kg(lbs)	2.6(5.7)		3.1(6.8)	
		Oil (Model)	L	1.2 (Ester)MEL56			
REFRIGERANT PIPING	Pipe size O.D.	Liquid	mm(in.)	9.52(3/8)			
		Gas	mm(in.)	15.88(5/8)			
	Connection method	Indoor side		Flared			
		Outdoor side		Flared			
	Between the indoor & outdoor unit	Height difference		Max. 40m		Max. 50m	
		Piping length		Max. 40m		Max. 50m	

	Service Ref.			PUH-P71VGAA / YGAA.UK		PUH-P100VGAA / YGAA.UK	
OUTDOOR UNIT	Mode			Cooling	Heating	Cooling	Heating
	Power supply (phase, cycle, voltage)			Single, 50Hz, 230V / 3-ph, 50Hz, 400V(4wires)			
	Running current		A	15.66 / 5.23	16.67 / 5.56	16.43/ 5.48	17.34 / 5.79
	Max current		A	22.66 / 10.8		23.57 / 10.8	
	External finish			Munsell 5Y 7/1			
	Refrigerant control			Linear Expansion Valve			
	Compressor			Hermetic			
	Model			NE52VNJMT / NE52YDKMT		NE56VNJMT / NE56YDKMT	
	Motor output		kW	2.5		2.7	
	Starter type			Line start			
	Protection devices			Internal thermostat / Thermal relay HP switch / HP switch Discharge thermo / Discharge thermo			
	Crankcase heater		W	38			
	Heat exchanger			Plate fin coil			
	Fan	Fan(drive) × No.		Propeller (direct) × 1		Propeller (direct) × 2	
		Fan motor output	kW	0.07		0.07+0.07	
		Airflow	m³/min(CFM)	50(1,770)		85(3,000)	
	Defrost method			Reverse cycle			
	Noise level	Cooling	dB	49		51	
		Heating	dB	51		53	
	Dimensions	W	mm(in.)	900(35-7/16)			
		D	mm(in.)	330+20(13+3/4)			
		H	mm(in.)	855(33-5/8)		1,260(49-5/8)	
	Weight		kg(lbs)	79(174)		97(214)	
	Refrigerant			R407C			
		Charge	kg(lbs)	3.3(7.3)		4.0(8.8)	
		Oil (Model)	L	1.3 (Ester)MEL56			
REFRIGERANT PIPING	Pipe size O.D.	Liquid	mm(in.)	9.52(3/8)			
		Gas	mm(in.)	15.88(5/8)		19.05(3/4)	
	Connection method	Indoor side		Flared			
		Outdoor side		Flared			
	Between the indoor & outdoor unit	Height difference		Max. 50m			
		Piping length		Max. 50m			

	Service Ref.			PUH-P125YGAA.UK		PUH-P140YGAA.UK	
OUTDOOR UNIT	Mode			Cooling	Heating	Cooling	Heating
	Power supply (phase, cycle, voltage)			3-ph, 50Hz, 400V(4wires)			
	Running current		A	7.52	8.06	8.92	9.45
	Max current		A	18.0		20.4	
	External finish			Munsell 5Y 7/1			
	Refrigerant control			Linear Expansion Valve			
	Compressor			Hermetic			
	Model			BE82YADMT		BE96YADMT	
	Motor output		kW	3.5		4.2	
	Starter type			Line start			
	Protection devices			Thermal relay, HP switch, Discharge thermo			
	Crankcase heater		W	38			
	Heat exchanger			Plate fin coil			
	Fan	Fan(drive) × No.		Propeller (direct) × 2			
		Fan motor output	kW	0.07 +0.07			
		Airflow	m³/min(CFM)	95(3,360)		100(3,530)	
	Defrost method			Reverse cycle			
	Noise level	Cooling	dB(A)	55		57	
		Heating	dB(A)	56		58	
	Dimensions	W	mm(in.)	1,050(41-5/16)			
		D	mm(in.)	330+20(13+3/4)			
		H	mm(in.)	1,260(49-5/8)			
	Weight		kg(lbs)	125(276)			
	Refrigerant			R407C			
		Charge	kg(lbs)	4.6(10.1)		4.9(10.8)	
		Oil (Model)	L	1.7 (Ester) MEL56			
REFRIGERANT PIPING	Pipe size O.D.	Liquid	mm(in.)	9.52(3/8)			
		Gas	mm(in.)	19.05(3/4)			
	Connection method	Indoor side		Flared			
		Outdoor side		Flared			
	Between the indoor & outdoor unit	Height difference		Max. 50m			
		Piping length		Max. 50m			

4-2. COOLING ONLY TYPE

	Service Ref.			PU-P35VGAA / YGAA.UK	PU-P50VGAA / YGAA.UK	PU-P60VGAA / YGAA.UK
OUTDOOR UNIT	Mode			Cooling	Cooling	Cooling
	Power supply (phase, cycle, voltage)			Single, 50Hz, 230V / 3-ph, 50Hz, 400V(4wires)		
		Running current	A	7.61 / 2.54	10.97 / 3.98	13.27 / 4.43
		Max. current	A	10.67 / 5.4	15.35 / 7.0	18.03 / 7.7
	External finish			Munsell 5Y 7/1		
	Refrigerant control			Linear Expansion Valve		
	Compressor			Hermetic		
		Model		RE277VHSMT/RE277YFKM	NE36VMJMT/NE36YEKMT	NE41VMJMT/NE41YEKMT
		Motor output	kW	1.3	1.6	1.9
		Starter type		Line start		
		Protection devices		Internal thermostat, HP switch, Discharge thermo / Thermal relay,Discharge thermo,HP switch		
		Crankcase heater	W	30	38	
	Heat exchanger			Plate fin coil		
	Fan	Fan(drive) × No.		Propeller (direct) × 1		
		Fan motor output	kW	0.07		
		Airflow	m³/min(CFM)	45(1,590)	55(1,940)	50(1,770)
	Defrost method			—		
	Noise level	Cooling	dB	47	48	
	Dimensions	W	mm(in.)	900(35-7/16)		
		D	mm(in.)	330+20(13+3/4)		
		H	mm(in.)	650(25-5/8)	855(33-5/8)	
	Weight		kg(lbs)	54(119)	74(163)	79(174)
	Refrigerant			R407C		
		Charge	kg(lbs)	2.5(5.5)	2.6(5.7)	3.1(6.8)
		Oil (Model)	L	0.57 (Ester)MEL56	1.2 (Ester)MEL56	
REFRIGERANT PIPING	Pipe size O.D.	Liquid	mm(in.)	9.52(3/8)		
		Gas	mm(in.)	15.88(5/8)		
	Connection method	Indoor side		Flared		
		Outdoor side		Flared		
	Between the indoor & outdoor unit	Height difference		Max. 40m		Max. 50m
		Piping length		Max. 40m		Max. 50m

	Service Ref.			PU-P71VGAA / YGAA.UK	PU-P100VGAA / YGAA.UK
OUTDOOR UNIT	Mode			Cooling	Cooling
	Power supply (phase, cycle, voltage)			Single, 50Hz, 230V / 3-ph, 50Hz, 400V(4wires)	
		Running current	A	15.66 / 5.23	16.43/ 5.48
		Max. current	A	22.66 / 10.8	23.57 / 10.8
	External finish			Munsell 5Y 7/1	
	Refrigerant control			Linear Expansion Valve	
	Compressor			Hermetic	
		Model		NE52VNJMT / NE52YDKMT	NE56VNJMT / NE56YDKMT
		Motor output	kW	2.5	2.7
		Starter type		Line start	
		Protection devices		Internal thermostat / Thermal relay HP switch / HP switch Discharge thermo / Discharge thermo	
		Crankcase heater	W	38	
	Heat exchanger			Plate fin coil	
	Fan	Fan(drive) × No.		Propeller (direct) × 1	Propeller (direct) × 2
		Fan motor output	kW	0.07	0.07+0.07
		Airflow	m³/min(CFM)	50(1,770)	85(3,000)
	Defrost method			—	
	Noise level	Cooling	dB	49	51
	Dimensions	W	mm(in.)	900(35-7/16)	
		D	mm(in.)	330+20(13+3/4)	
		H	mm(in.)	855(33-5/8)	1,260(49-5/8)
	Weight		kg(lbs)	79(174)	97(214)
	Refrigerant			R407C	
		Charge	kg(lbs)	3.3(7.3)	4.0(8.8)
		Oil (Model)	L	1.3 (Ester)MEL56	
REFRIGERANT PIPING	Pipe size O.D.	Liquid	mm(in.)	9.52(3/8)	
		Gas	mm(in.)	15.88(5/8)	19.05(3/4)
	Connection method	Indoor side		Flared	
		Outdoor side		Flared	
	Between the indoor & outdoor unit	Height difference		Max. 50m	
		Piping length		Max. 50m	

	Service Ref.			PU-P125YGAA.UK	PU-P140YGAA.UK
OUTDOOR UNIT	Mode			Cooling	Cooling
	Power supply (phase, cycle, voltage)			3-ph, 50Hz,400V(4wires)	
		Running current	A	7.52	8.92
		Max. current	A	18.0	20.4
	External finish			Munsell 5Y 7/1	
	Refrigerant control			Linear Expansion Valve	
	Compressor			Hermetic	
		Model		BE82YADMT	BE96YADMT
		Motor output	kW	3.5	4.2
		Starter type		Line start	
		Protection devices		Thermal relay, HP switch, Discharge thermo	
		Crankcase heater	W	38	
	Heat exchanger			Plate fin coil	
	Fan	Fan(drive) × No.		Propeller (direct) × 2	
		Fan motor output	kW	0.07+0.07	
		Airflow	m³/min(CFM)	95(3,360)	100(3,530)
	Defrost method			—	
	Noise level	Cooling	dB	55	57
	Dimensions	W	mm(in.)	1,050(41-5/16)	
		D	mm(in.)	330+20(13+3/4)	
		H	mm(in.)	1,260(49-5/8)	
	Weight		kg(lbs)	125(276)	
	Refrigerant			R407C	
		Charge	kg(lbs)	4.6(10.1)	4.9(10.8)
		Oil (Model)	L	1.7 (Ester) MEL56	
REFRIGERANT PIPING	Pipe size O.D.	Liquid	mm(in.)	9.52(3/8)	
		Gas	mm(in.)	19.05(3/4)	
	Connection method	Indoor side		Flared	
		Outdoor side		Flared	
	Between the indoor & outdoor unit	Height difference		Max. 50m	
		Piping length		Max. 50m	

5 DATA

5-1. REFILLING REFRIGERANT CHARGE (R407C : kg)

Service Ref.	Piping length (one way)					Factory charged
	10m	20m	30m	40m	50m	
PUH-P25VGAA.UK	1.6	1.7	1.8	—	—	1.7
PUH-P35VGAA.UK PU-P35VGAA.UK	2.4	2.5	2.6	3.0	—	2.5
PUH-P35YGAA.UK PU-P35YGAA.UK	2.4	2.5	2.6	3.0	—	2.5
PUH-P50VGAA.UK PU-P50VGAA.UK	2.5	2.6	3.1	3.7	—	2.6
PUH-P50YGAA.UK PU-P50YGAA.UK	2.5	2.6	3.1	3.7	—	2.6
PUH-P60VGAA.UK PU-P60VGAA.UK	2.9	3.1	3.3	3.9	4.5	3.1
PUH-P60YGAA.UK PU-P60YGAA.UK	2.9	3.1	3.3	3.9	4.5	3.1
PUH-P71VGAA.UK PU-P71VGAA.UK	2.9	3.1	3.3	3.9	4.5	3.3
PUH-P71YGAA.UK PU-P71YGAA.UK	2.9	3.1	3.3	3.9	4.5	3.3
PUH-P100VGAA.UK PU-P100VGAA.UK	3.4	3.7	4.0	4.7	5.4	4.0
PUH-P100YGAA.UK PU-P100YGAA.UK	3.4	3.7	4.0	4.7	5.4	4.0
PUH-P125YGAA.UK PU-P125YGAA.UK	4.0	4.3	4.6	5.3	6.0	4.6
PUH-P140YGAA.UK PU-P140YGAA.UK	4.3	4.6	4.9	5.6	6.3	4.9

PRE- CHARGED REFRIGERANT IS SUPPLIED FOR PIPING LENGTH AT SHIPMENT.

5-2. COMPRESSOR TECHNICAL DATA

(at 20°C)

Unit		PUH-P25VGAA.UK	PUH-P35VGAA.UK PU-P35VGAA.UK	PUH-P35YGAA.UK PU-P35YGAA.UK	PUH-P50VGAA.UK PU-P50VGAA.UK	PUH-P50YGAA.UK PU-P50YGAA.UK
Compressor model		RE189VHSMT	RE277VHSMT	RE277YFKM	NE36VMJMT	NE36YEKMT
Winding Resistance (Ω)	U-V (R-C)	2.79	1.80	10.8	0.89	5.01
	U-W (S-C)	3.36	3.00	10.8	2.03	5.01
	W-V	—	—	10.8	—	5.01

Unit		PUH-P60VGAA.UK PU-P60VGAA.UK	PUH-P60YGAA.UK PU-P60YGAA.UK	PUH-P71VGAA.UK PU-P71VGAA.UK	PUH-P71YGAA.UK PU-P71YGAA.UK	PUH-P100VGAA.UK PU-P100VGAA.UK
Compressor model		NE41VMJMT	NE41YEKMT	NE52VNJMT	NE52YDKMT	NE56VNJMT
Winding Resistance (Ω)	U-V (R-C)	0.87	5.00	0.64	3.59	0.62
	U-W (S-C)	2.22	5.00	1.67	3.59	1.59
	W-V	—	5.00	—	3.59	—

Unit		PUH-P100YGAA.UK PU-P100YGAA.UK	PUH-P125YGAA.UK PU-P125YGAA.UK	PUH-P140YGAA.UK PU-P140YGAA.UK
Compressor model		NE56YDKMT	BE82YADMT	BE96YADMT
Winding Resistance (Ω)	U-V (R-C)	3.32	2.123	1.963
	U-W (S-C)	3.32	2.123	1.963
	W-V	3.32	2.123	1.963

5-3. NOISE CRITERION CURVES

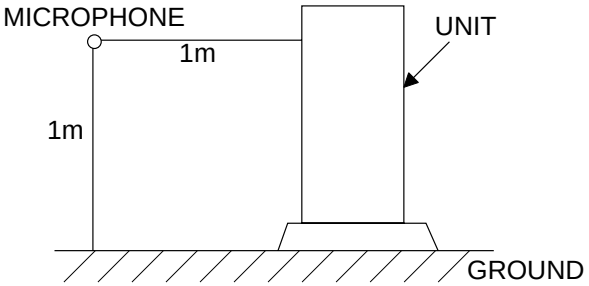

PUH-P25VGAA.UK

MODE	SPL(dB)	LINE
COOLING	46	○—○
HEATING	48	●—●

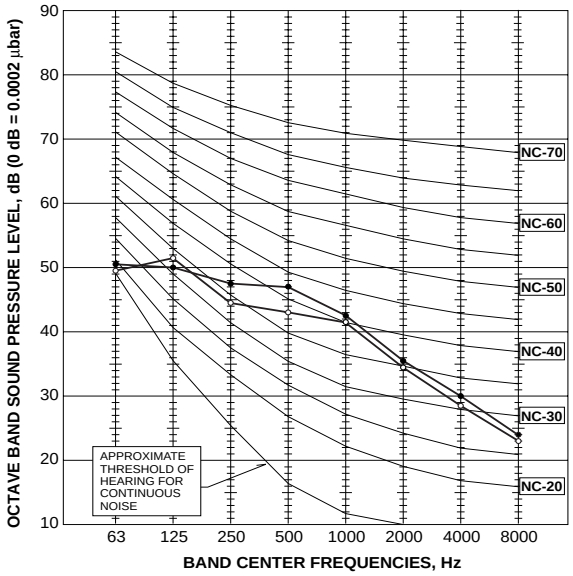

PUH-P35VGAA.UK
PUH-P35YGAA.UK
PU-P35VGAA.UK
PU-P35YGAA.UK

MODE	SPL(dB)	LINE
COOLING	47	○—○
HEATING	49	●—●

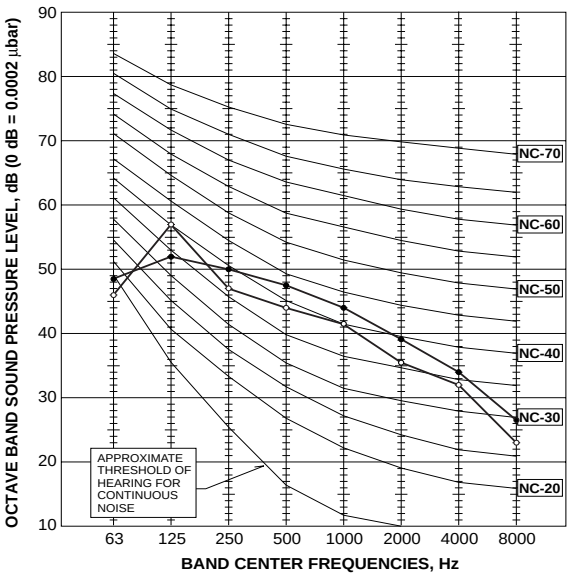

PUH-P50VGAA.UK
PUH-P50YGAA.UK
PU-P50VGAA.UK
PU-P50YGAA.UK

MODE	SPL(dB)	LINE
COOLING	48	○—○
HEATING	49	●—●

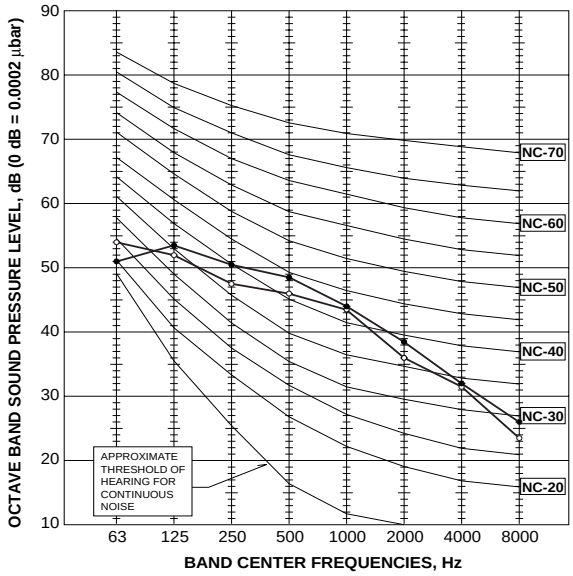

PUH-P60VGAA.UK
PUH-P60YGAA.UK
PU-P60VGAA.UK
PU-P60YGAA.UK

MODE	SPL(dB)	LINE
COOLING	48	○—○
HEATING	50	●—●

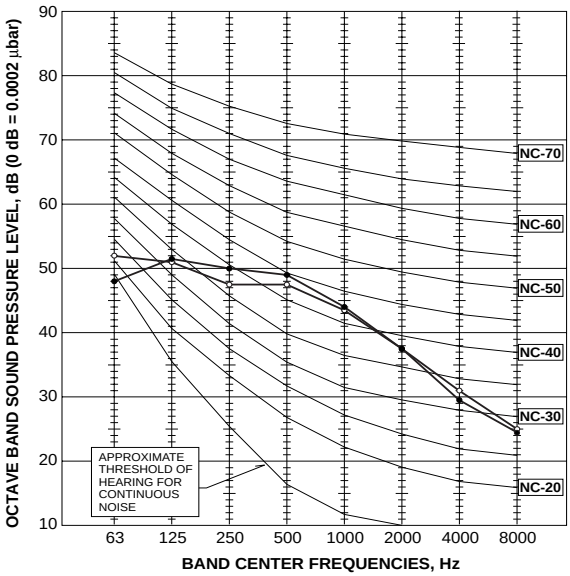

PUH-P71VGAA.UK
PUH-P71YGAA.UK
PU-P71VGAA.UK
PU-P71YGAA.UK

MODE	SPL(dB)	LINE
COOLING	49	○——○
HEATING	51	●——●

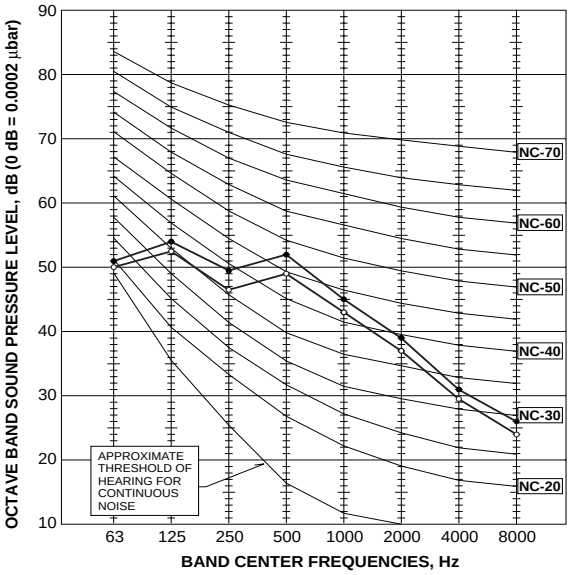

PUH-P100VGAA.UK
PUH-P100YGAA.UK
PU-P100VGAA.UK
PU-P100YGAA.UK

MODE	SPL(dB)	LINE
COOLING	51	○——○
HEATING	53	●——●

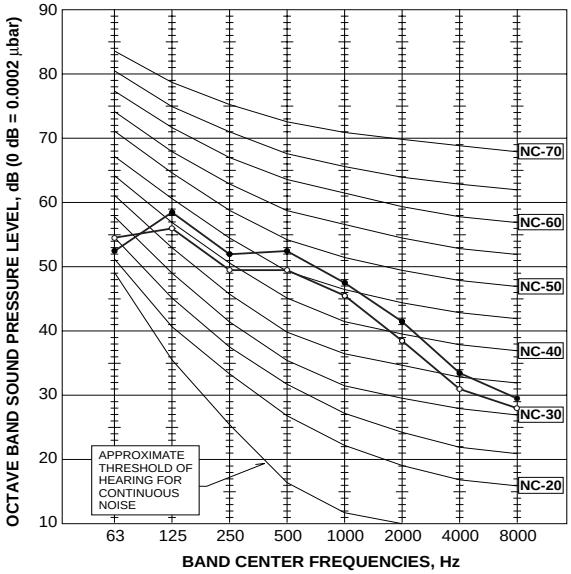

PUH-P125YGAA.UK
PU-P125YGAA.UK

MODE	SPL(dB)	LINE
COOLING	55	○——○
HEATING	56	●——●

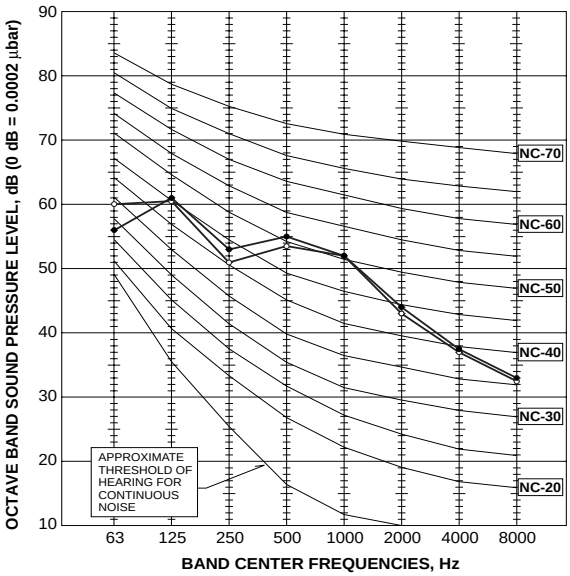

PUH-P140YGAA.UK
PU-P140YGAA.UK

MODE	SPL(dB)	LINE
COOLING	57	○——○
HEATING	58	●——●

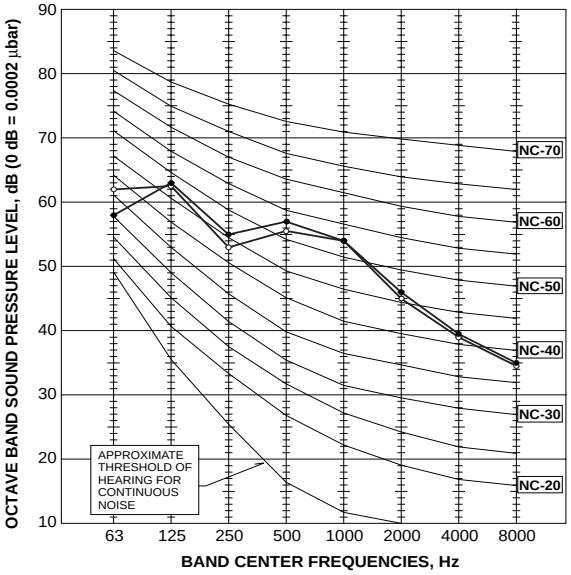

5-4. STANDARD OPERATION DATA

Heat pump type

Representative matching				PMH-P25BA		PLA-RP35AA		PLA-RP50AA		PLA-RP60AA	
Mode				Cooling	Heating	Cooling	Heating	Cooling	Heating	Cooling	Heating
Total	Capacity		W	3,100	3,350	4,500	4,950	5,600	6,350	6,700	7,300
	Input		kW	1.14	1.05	1.72	1.70	2.53	2.20	2.57	2.40
Electrical circuit	**Indoor unit**			**PMH-P25BA**		**PLA-RP35AA**		**PLA-RP50AA**		**PLA-RP60AA**	
	Phase , Hz			1, 50		1 , 50		1 , 50		1 , 50	
	Volts		V	230		230		230		230	
	Amperes		A	0.19	0.19	0.79		0.79		0.79	
	Outdoor unit			**PUH-P25VGAA.UK**		**PUH-P35VGAA.UK PUH-P35YGAA.UK**		**PUH-P50VGAA.UK PUH-P50YGAA.UK**		**PUH-P60VGAA.UK PUH-P60YGAA.UK**	
	Phase , Hz			1, 50	1, 50	1/3 , 50		1/3 , 50		1/3 , 50	
	Volts		V	230	230	230/400		230/400		230/400	
	Amperes		A	5.13	4.72	7.43/1.94	7.33/1.91	11.30/3.23	9.72/2.70	11.49/3.29	10.68/3.02
Refrigerant circuit	Discharge pressure		MPa	2.01	1.85	2.01	1.92	2.48	1.96	2.18	1.92
	Suction pressure		MPa	0.55	0.44	0.59	0.37	0.59	0.38	0.54	0.38
	Discharge temperature		°C	71	70	78	77	85	76	80	75
	Condensing temperature		°C	48	44	48	48	55	45	51	47
	Suction temperature		°C	8.0	4.0	11	1	10	0	9	1
	Ref. pipe length		m	5	5	5	5	5	5	5	5
Indoor side	Intake air temperature	D.B.	°C	27	20	27	20	27	20	27	20
		W.B.	°C	19	15	19	15	19	15	19	15
	Discharge air temperature	D.B.	°C	13.3	41.5	14.1	38.9	14.6	38.9	12.9	41.9
Outdoor side	Intake air temperature	D.B.	°C	35	7	35	7	35	7	35	7
		W.B.	°C	24	6	24	6	24	6	24	6
SHF				0.77	—	0.75	—	0.82	—	0.72	—
BF				0.09	—	0.16	—	0.12	—	0.14	—

The unit of pressure has been changed to MPa based on international SI system.
The conversion factor is : 1(MPa)=10.2(kgf/㎠)

Representative matching				PLA-RP71AA		PLA-RP100AA		PLA-RP125AA		PLA-RP140AA	
Mode				Cooling	Heating	Cooling	Heating	Cooling	Heating	Cooling	Heating
Total	Capacity		W	7,700	9,200	9,600	10,500	13,300	15,600	14,200	17,000
	Input		kW	3.42	3.48	3.68	3.91	5.09	5.54	5.90	6.35
Electrical circuit	**Indoor unit**			**PLA-RP71AA**		**PLA-RP100AA**		**PLA-RP125AA**		**PLA-RP140AA**	
	Phase , Hz			1 , 50		1 , 50		1 , 50		1 , 50	
	Volts		V	230		230		230		230	
	Amperes		A	0.79		1.25		1.64		1.64	
	Outdoor unit			**PUH-P71VGAA.UK PUH-P71YGAA.UK**		**PUH-P100VGAA.UK PUH-P100YGAA.UK**		**PUH-P125YGAA.UK**		**PUH-P140YGAA.UK**	
	Phase , Hz			1/3 , 50		1/3 , 50		3 , 50		3 , 50	
	Volts		V	230/400		230/400		400		400	
	Amperes		A	15.55/4.64	15.84/4.74	16.33/4.59	17.43/4.96	6.44	7.16	7.73	8.44
Refrigerant circuit	Discharge pressure		MPa	2.30	2.38	1.98	2.12	2.11	2.39	2.27	2.36
	Suction pressure		MPa	0.47	0.39	0.54	0.42	0.48	0.42	0.45	0.41
	Discharge temperature		°C	81	88	71	75	71	79	81	84
	Condensing temperature		°C	44	45	42	47	41	44	45	46
	Suction temperature		°C	5	0	8	1	6	0	2	-1
	Ref. pipe length		m	5	5	5	5	5	5	5	5
Indoor side	Intake air temperature	D.B.	°C	27	20	27	20	27	20	27	20
		W.B.	°C	19	15	19	15	19	15	19	15
	Discharge air temperature	D.B.	°C	13.4	45.1	14.0	40.1	11.7	48.7	11.3	51.2
Outdoor side	Intake air temperature	D.B.	°C	35	7	35	7	35	7	35	7
		W.B.	°C	24	6	24	6	24	6	24	6
SHF				0.74	—	0.78	—	0.72	—	0.69	—
BF				0.13	—	0.12	—	0.06	—	0.09	—

The unit of pressure has been changed to MPa based on international SI system.
The conversion factor is : 1(MPa)=10.2(kgf/㎠)

Cooling only type

Representative matching				PLA-RP35AA	PLA-RP50AA	PLA-RP60AA
Mode				Cooling	Cooling	Cooling
Total	Capacity		W	4,500	5,600	6,700
	Input		kW	1.72	2.53	2.57
Electrical circuit	**Indoor unit**			**PLA-RP35AA**	**PLA-RP50AA**	**PLA-RP60AA**
	Phase , Hz			1 , 50	1 , 50	1 , 50
	Volts		V	230	230	230
	Amperes		A	0.79	0.79	0.79
	Outdoor unit			**PU-P35VGAA.UK PU-P35YGAA.UK**	**PU-P50VGAA.UK PU-P50YGAA.UK**	**PU-P60VGAA.UK PU-P60YGAA.UK**
	Phase , Hz			1/3 , 50	1/3 , 50	1/3 , 50
	Volts		V	230/400	230/400	230/400
	Amperes		A	7.43/1.94	11.30/3.23	11.49/3.29
Refrigerant circuit	Discharge pressure		MPa	2.01	2.48	2.18
	Suction pressure		MPa	0.59	0.59	0.54
	Discharge temperature		°C	78	85	80
	Condensing temperature		°C	48	55	51
	Suction temperature		°C	11	10	9
	Ref. pipe length		m	5	5	5
Indoor side	Intake air temperature	D.B.	°C	27	27	27
		W.B.	°C	19	19	19
	Discharge air temperature	D.B.	°C	14.1	14.6	12.9
Outdoor side	Intake air temperature	D.B.	°C	35	35	35
		W.B.	°C	24	24	24
SHF				0.75	0.82	0.72
BF				0.16	0.12	0.14

The unit of pressure has been changed to MPa based on international SI system.
The conversion factor is : 1(MPa)=10.2(kgf/㎠)

Representative matching				PLA-RP71AA	PLA-RP100AA	PLA-RP125AA	PLA-RP140AA
Mode				Cooling	Cooling	Cooling	Cooling
Total	Capacity		W	7,700	9,200	13,300	14,200
	Input		kW	3.42	3.68	5.09	5.90
Electrical circuit	**Indoor unit**			**PLA-RP71AA**	**PLA-RP100AA**	**PLA-RP125AA**	**PLA-RP140AA**
	Phase , Hz			1 , 50	1 , 50	1 , 50	1 , 50
	Volts		V	230	230	230	230
	Amperes		A	0.79	1.25	1.64	1.64
	Outdoor unit			**PU-P71VGAA.UK PU-P71YGAA.UK**	**PU-P100VGAA.UK PU-P100YGAA.UK**	**PU-P125YGAA.UK**	**PU-P140YGAA.UK**
	Phase , Hz			1/3 , 50	1/3 , 50	3 , 50	3 , 50
	Volts		V	230/400	230/400	400	400
	Amperes		A	15.55/4.64	16.33/4.59	6.44	7.73
Refrigerant circuit	Discharge pressure		MPa	2.30	1.98	2.11	2.27
	Suction pressure		MPa	0.47	0.54	0.48	0.45
	Discharge temperature		°C	81	71	71	81
	Condensing temperature		°C	44	42	41	45
	Suction temperature		°C	5	8	6	2
	Ref. pipe length		m	5	5	5	5
Indoor side	Intake air temperature	D.B.	°C	27	27	27	27
		W.B.	°C	19	19	19	19
	Discharge air temperature	D.B.	°C	13.4	14.0	11.7	11.3
Outdoor side	Intake air temperature	D.B.	°C	35	35	35	35
		W.B.	°C	24	24	24	24
SHF				0.74	0.78	0.72	0.69
BF				0.13	0.12	0.06	0.09

The unit of pressure has been changed to MPa based on international SI system.
The conversion factor is : 1(MPa)=10.2(kgf/㎠)

6 OUTLINES AND DIMENSIONS

OUTDOOR UNIT
PUH-P25VGAA.UK
PUH-P35VGAA.UK
PUH-P35YGAA.UK
PU-P35VGAA.UK
PU-P35YGAA.UK

Unit : mm

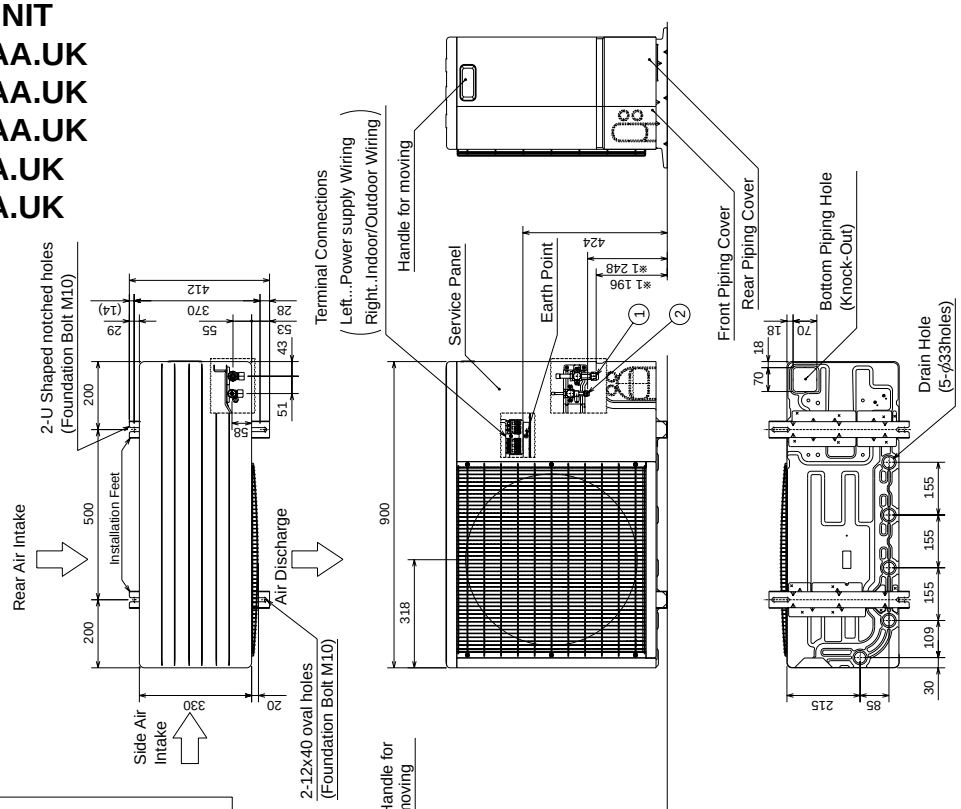

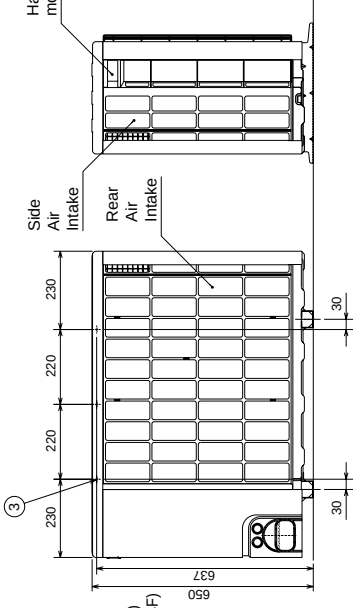

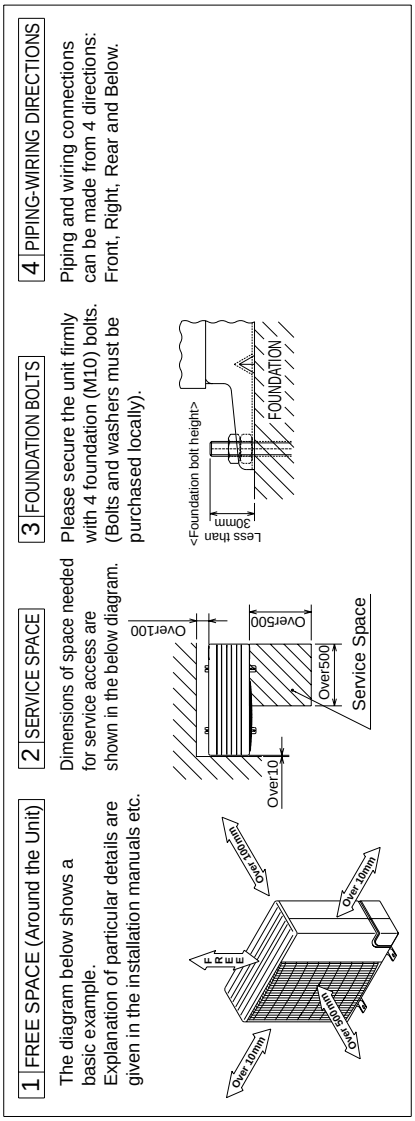

Explanation of Notes

① · · Refrigerant GAS pipe connection (FLARE)P35V(Y)GAA: φ15.88 (5/8F)
① · · Refrigerant GAS pipe connection (FLARE)P25VGAA : φ12.7 (1/2F)
② · · Refrigerant LIQUID pipe connection (FLARE)P35V(Y)GAA: φ9.52 (3/8F)
② · · Refrigerant LIQUID pipe connection (FLARE)P25VGAA : φ6.35 (1/4F)
※1 · · Height of STOP VALVE connection location.
③ · · 3-φ3.6 holes (for securing the top of the unit)
These holes are provided for cases where the unit must be secured by the base AND by the top surface.
Use Self Tapping screws 5 x L15 or less.(Obtained locally)

Piping Knock-Out Hole Details

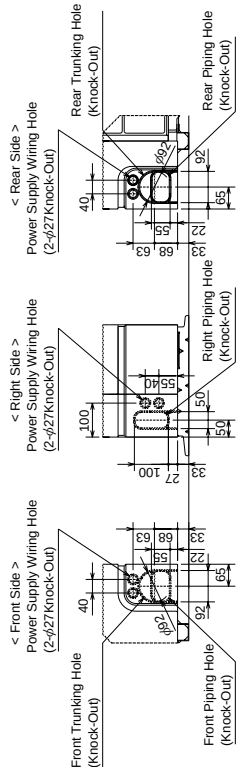

PUH-P50VGAA.UK
PUH-P50YGAA.UK
PUH-P60VGAA.UK
PUH-P60YGAA.UK
PUH-P71VGAA.UK
PUH-P71YGAA.UK
PU-P50VGAA.UK
PU-P50YGAA.UK
PU-P60VGAA.UK
PU-P60YGAA.UK
PU-P71VGAA.UK
PU-P71YGAA.UK

1 FREE SPACE (Around the Unit)

The diagram below shows a basic example.
Explanation of particular details are given in the installation manuals etc.

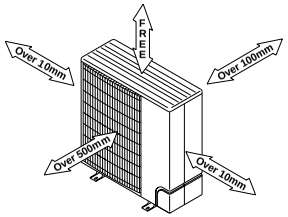

2 SERVICE SPACE

Dimensions of space needed for service access are shown in the below diagram.

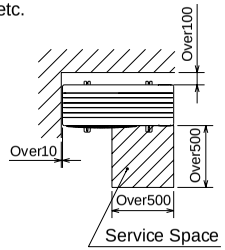

3 FOUNDATION BOLTS

Please secure the unit firmly with 4 foundation (M10) bolts. (Bolts and washers must be purchased locally).

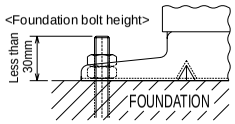

4 PIPING-WIRING DIRECTIONS

Piping and wiring connections can be made from 4 directions: Front, Right, Rear and Below.

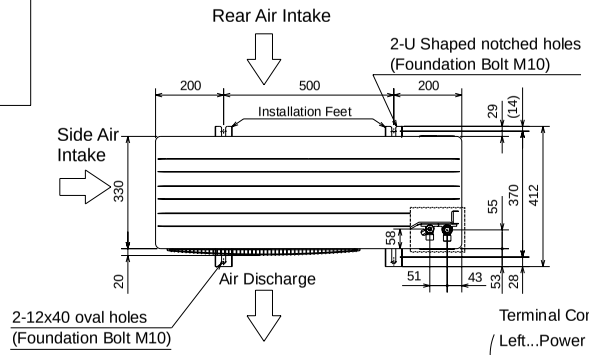

Explanation of Notes

① · · · Refrigerant GAS pipe connection (FLARE) ϕ15.88 (5/8F)
② · · · Refrigerant LIQUID pipe connection (FLARE) ϕ9.52 (3/8F)
※1 · · · Height of STOP VALVE connection location.
③ · · · 3-ϕ3.6 holes (for securing the top of the unit)
These holes are provided for cases where the unit must be secured by the base AND by the top surface together.
Use Self Tapping screws 5 x L15 or less.
(Obtained Locally)

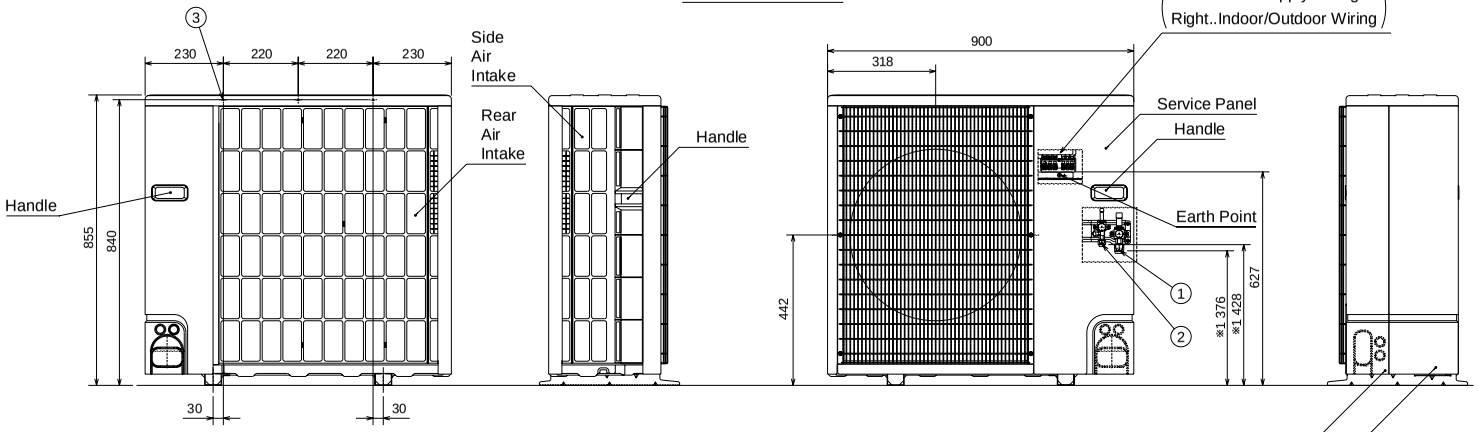

Piping Knock-Out Hole Details

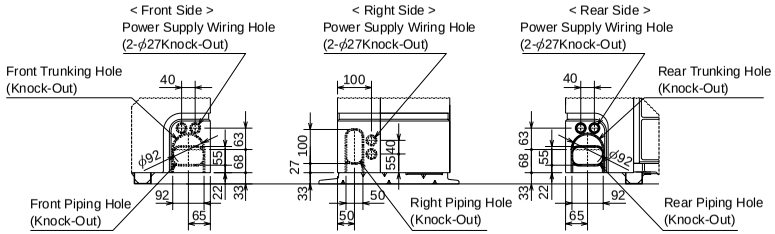

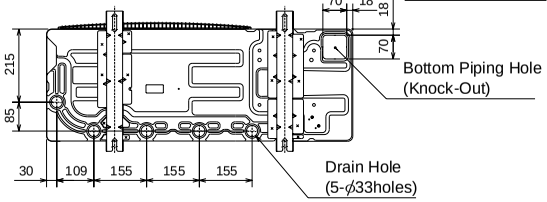

Unit : mm

PUH-P100VGAA.UK
PUH-P100YGAA.UK
PU-P100VGAA.UK
PU-P100YGAA.UK

Unit : mm

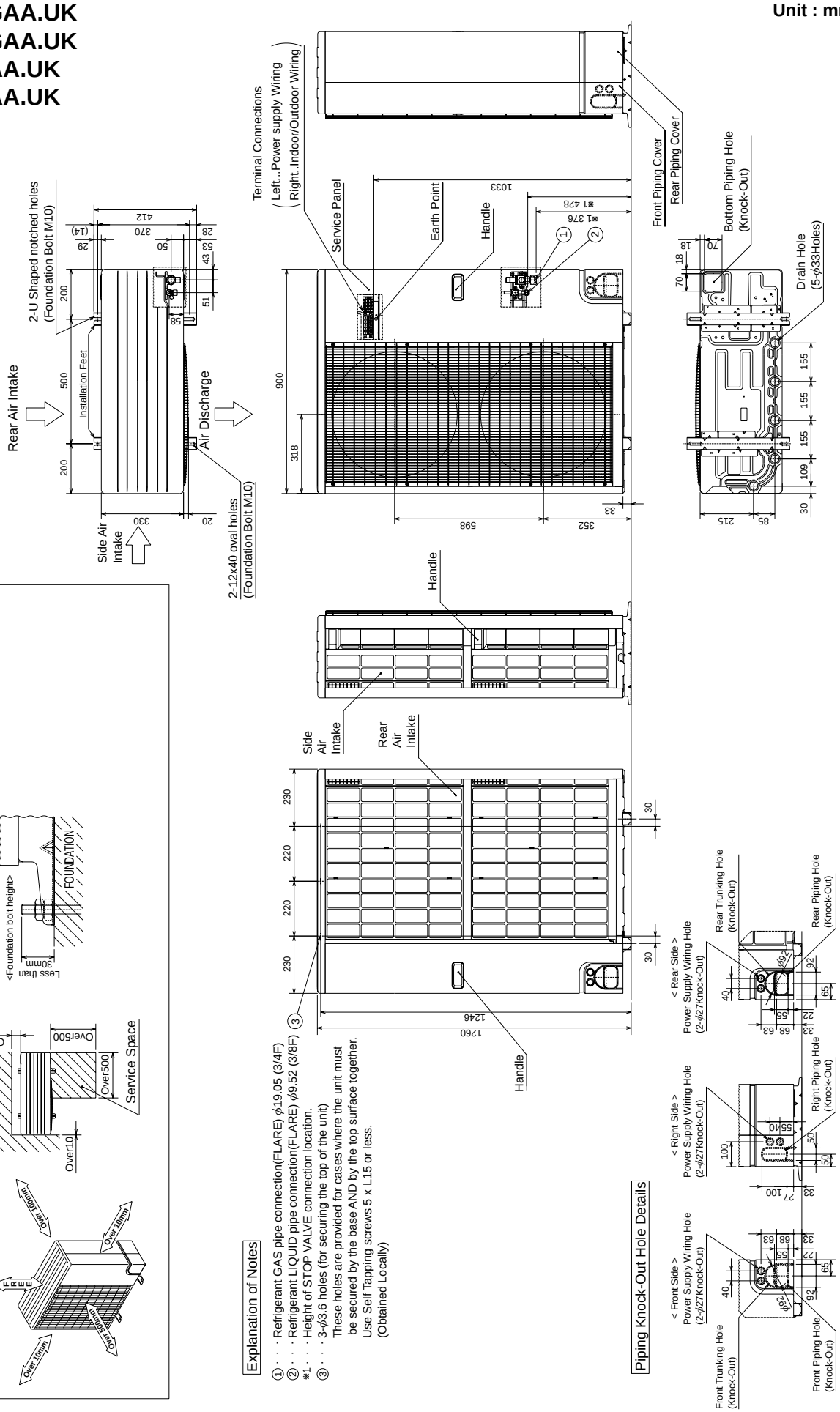

PUH-P125YGAA.UK
PUH-P140YGAA.UK
PU-P125YGAA.UK
PU-P140YGAA.UK

Unit : mm

1 FREE SPACE (Around the Unit)

The diagram below shows a basic example.
Explanation of particular details are given in the installation manuals etc.

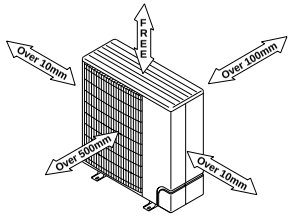

2 SERVICE SPACE

Dimensions of space needed for service access are shown in the below diagram.

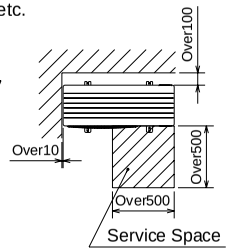

3 FOUNDATION BOLTS

Please secure the unit firmly with 4 foundation (M10) bolts. (Bolts and washers must be purchased locally).

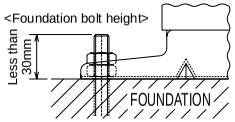

4 PIPING-WIRING DIRECTIONS

Piping and wiring connections can be made from 4 directions: Front, Right, Rear and Below.

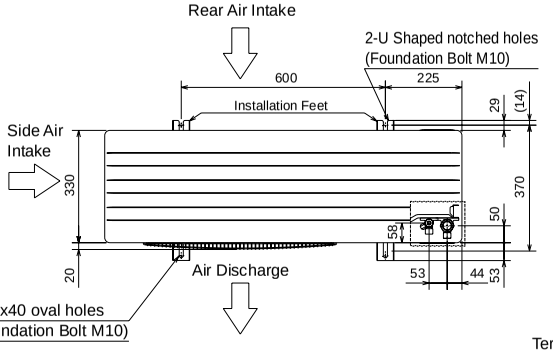

Explanation of Notes

①・・・ Refrigerant GAS pipe connection(FLARE) ϕ19.05 (3/4F)
②・・・ Refrigerant LIQUID pipe connection(FLARE) ϕ9.52 (3/8F)
※1・・・ Height of STOP VALVE connection location.
③・・・ 3-ϕ3.6 holes (for securing the top of the unit)
These holes are provided for cases where the unit must be secured by the base AND by the top surface together.
Use Self Tapping screws 5 x L15 or less.
(Obtained Locally)

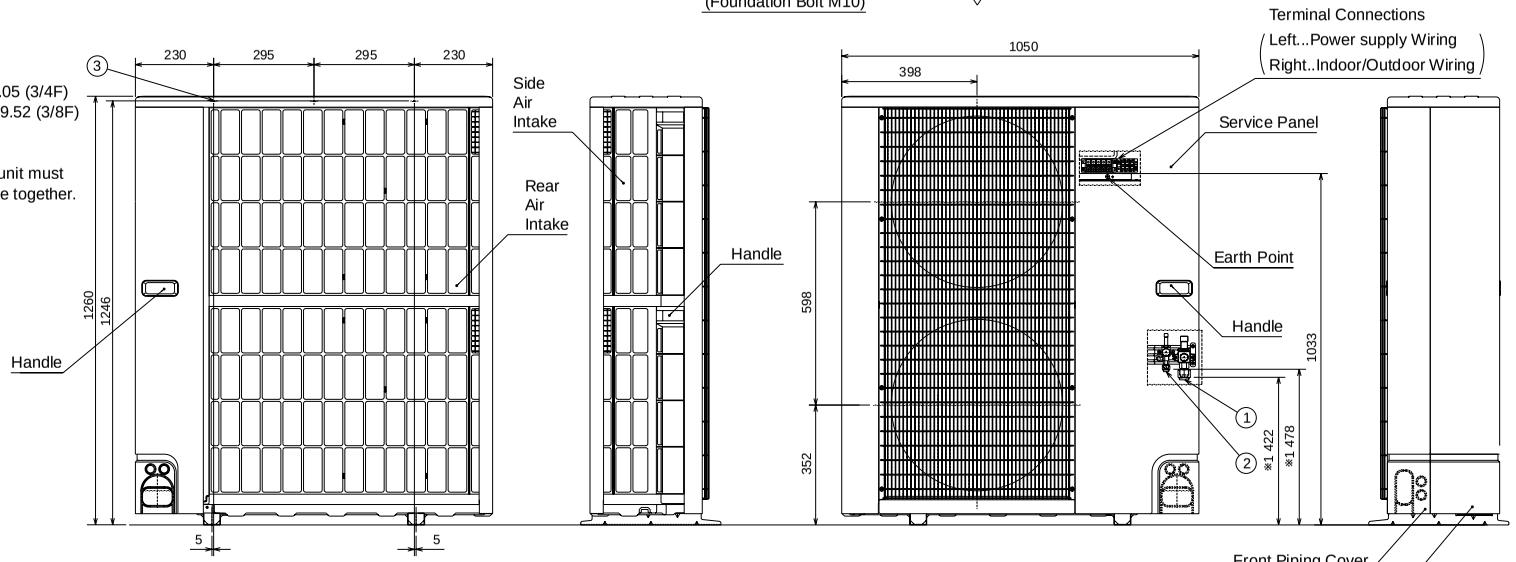

Piping Knock-Out Hole Details

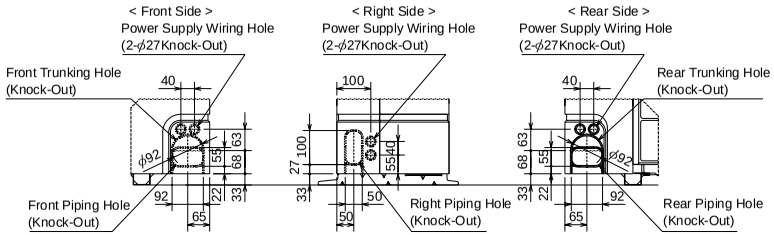

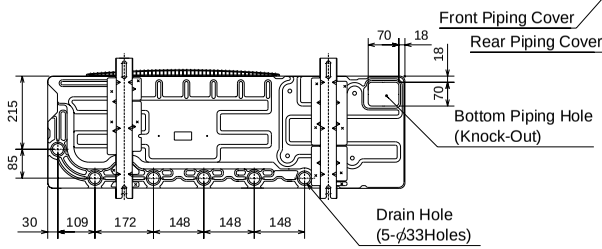

7 WIRING DIAGRAM

PUH-P25VGAA.UK PUH-P35VGAA.UK PUH-P50VGAA.UK PUH-P60VGAA.UK PUH-P71VGAA.UK PUH-P100VGAA.UK
PU-P35VGAA.UK PU-P50VGAA.UK PU-P60VGAA.UK PU-P71VGAA.UK PU-P100VGAA.UK

SYMBOL	NAME		SYMBOL	NAME
MC	COMPRESSOR (INNER THERMOSTAT)		O.B	OUTDOOR CONTROLLER BOARD
MF	FAN MOTOR (INNER THERMOSTAT)		FUSE1 (O.B)	FUSE (6.3A)
TH3	THERMISTOR	LIQUID TEMP	FUSE2 (O.B)	FUSE (6.3A)
TH4		DISCHARGE TEMP	FUSE3 (O.B)	FUSE (6.3A)
TH6		COND. / EVA. TEMP	FUSE4 (O.B)	FUSE (6.3A)
C3	MF CAPACITOR		X51 (O.B)	MC/CH RELAY
C4	MF CAPACITOR		X52 (O.B)	21S4 RELAY
C5	MC CAPACITOR		F.C (O.B)	FAN CONTROLLER
CH	CRANKCASE HEATER		SW1 (O.B)	GROUP NUMBER ADDRESS
52C	MC CONTACTOR		SW4 (O.B)	TEST RUN
21S4	4-WAY VALVE SOLENOID COIL		SW5 (O.B)	FUNCTION SELECTION
63H	HIGH PRESSURE PROTECT SWITCH		J1)~J6 (O.B)	MODEL SELECTION
49C	INNER THERMOSTAT FOR MC		T (O.B)	TRANSFORMER
TB1	TERMINAL BLOCK		CT (O.B)	CURRENT TRANS
LEV	LINEAR EXPANSION VALVE		LED1 (O.B)	OPERATION CHECK DISPLAY LED
TB2	TERMINAL BLOCK		LED2 (O.B)	OPERATION CHECK DISPLAY LED
			CN31 (O.B)	EMERGENCY OPERATION CONNECTER

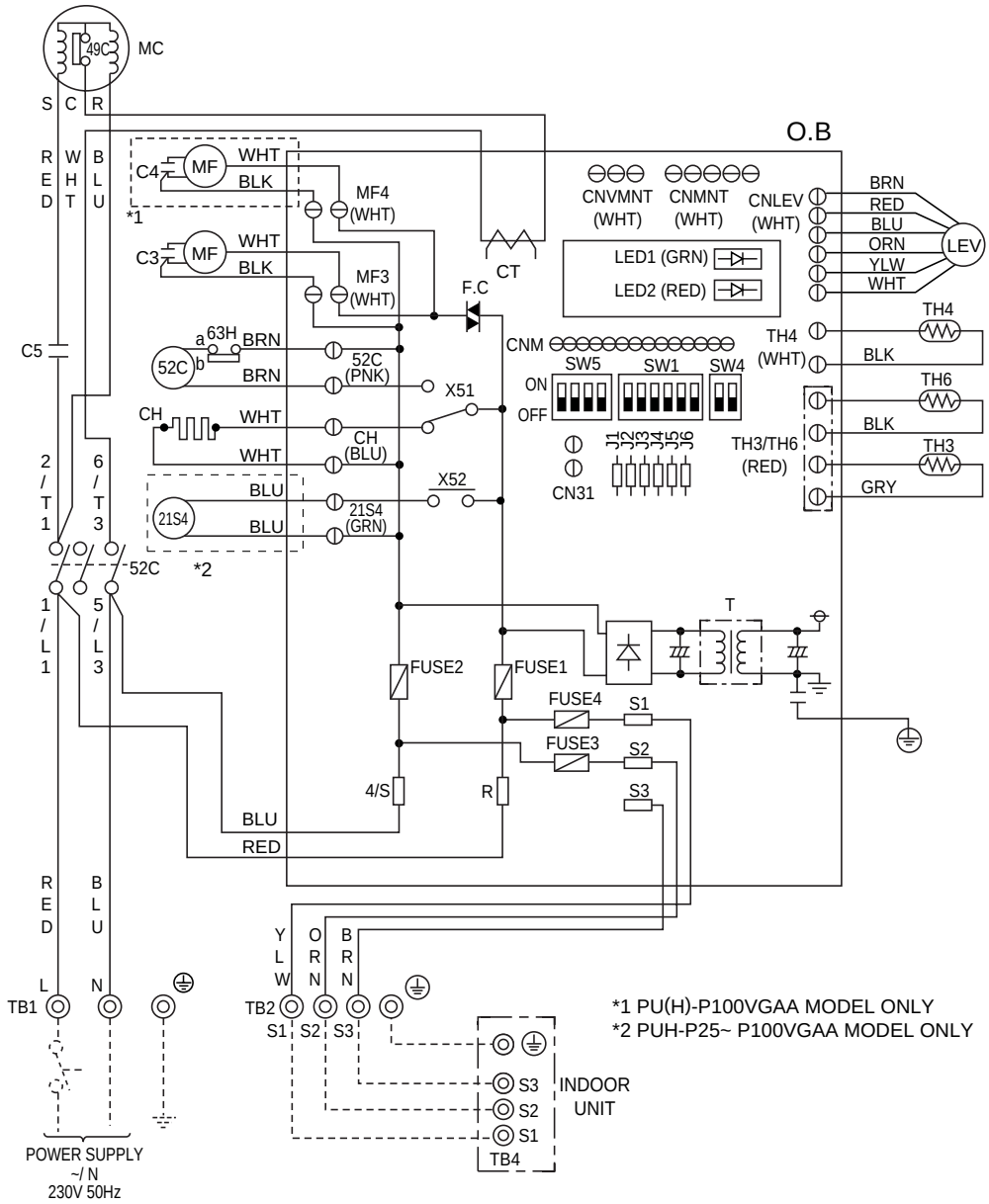

<Notes when servicing>
Some fastening terminals have a lock mechanism: When removing the fastening terminal, push the projection (locking lever) on the terminal with your finger and pull it out.

PUH-P35YGAA.UK PUH-P50YGAA.UK PUH-P60YGAA.UK PUH-P71YGAA.UK
PUH-P100YGAA.UK PUH-P125YGAA.UK PUH-P140YGAA.UK
PU-P35YGAA.UK PU-P50YGAA.UK PU-P60YGAA-UK PU-P71YGAA.UK
PU-P100YGAA.UK PU-P125YGAA.UK PU-P140YGAA.UK

SYMBOL	NAME		SYMBOL	NAME
MC	COMPRESSOR		O.B	OUTDOOR CONTROLLER BOARD
MF	FAN MOTOR (INNER THERMOSTAT)		FUSE1 (O.B)	FUSE (6.3A)
TH3	THERMISTOR	LIQUID TEMP	FUSE2 (O.B)	FUSE (6.3A)
TH4		DISCHARGE TEMP	FUSE3 (O.B)	FUSE (6.3A)
TH6		COND. / EVA. TEMP	FUSE4 (O.B)	FUSE (6.3A)
C3	MF CAPACITOR		X51 (O.B)	MC/CH RELAY
C4	MF CAPACITOR		X52 (O.B)	21S4 RELAY
CH	CRANKCASE HEATER		X53 (O.B)	SV RELAY
52C	MC CONTACTOR		F.C (O.B)	FAN CONTROLLER
21S4	4-WAY VALVE SOLENOID COIL		SW1 (O.B)	GROUP NUMBER ADDRESS
SV	BYPASS VALVE SOLENOID COIL		SW4 (O.B)	TEST RUN
63H	HIGH PRESSURE PROTECT SWITCH		SW5 (O.B)	FUNCTION SELECTION
51C	THERMAL RELAY		J1~J6 (O.B)	MODEL SELECTION
TB1	TERMINAL BLOCK		T (O.B)	TRANSFORMER
LEV	LINEAR EXPANSION VALVE		CT (O.B)	CURRENT TRANS
TB2	TERMINAL BLOCK		LED1 (O.B)	OPERATION CHECK DISPLAY LED
63L	LOW PRESSURE PROTECT SWITCH		LED2 (O.B)	OPERATION CHECK DISPLAY LED
			CN31 (O.B)	EMERGENCY OPERATION CONNECTER

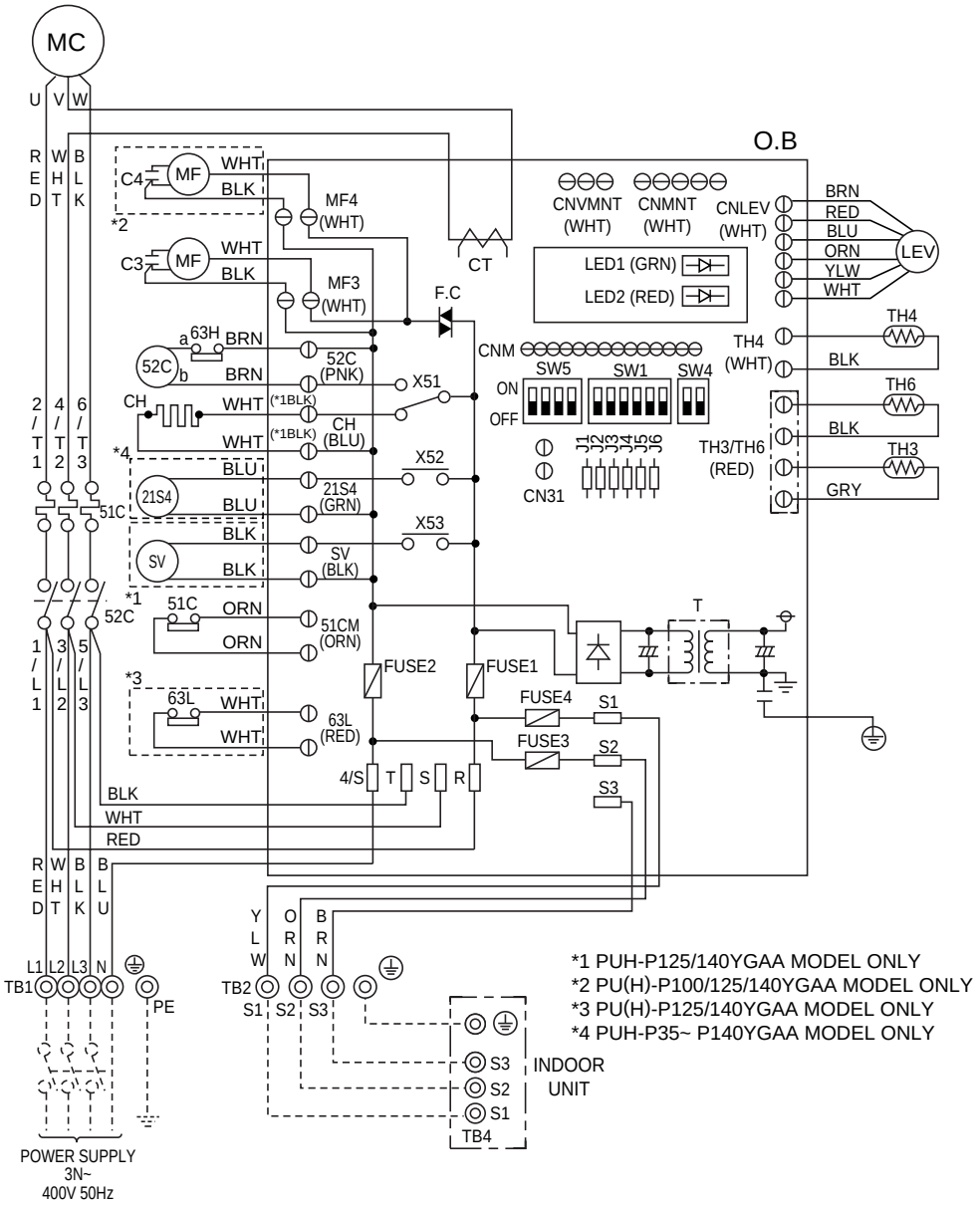

*1 PUH-P125/140YGAA MODEL ONLY
*2 PU(H)-P100/125/140YGAA MODEL ONLY
*3 PU(H)-P125/140YGAA MODEL ONLY
*4 PUH-P35~ P140YGAA MODEL ONLY

<Notes when servicing>
Some fastening terminals have a lock mechanism: When removing the fastening terminal, push the projection (locking lever) on the terminal with your finger and pull it out.

8 WIRING SPECIFICATIONS

8-1. FIELD ELECTRICAL WIRING (power wiring specifications)

Outdoor unit model			P25,35V	P50,60V	P71,100V	P35,50,60,71,100Y	P125, 140Y
Outdoor unit power supply			~/N (single), 50 Hz, 230 V	~/N (single), 50 Hz, 230 V	~/N (single), 50 Hz, 230 V	3N ~ (3phase), 50 Hz, 400 V	3N ~ (3phase), 50 Hz, 400 V
Outdoor unit input capacity Main switch (Breaker)		*1	16 A	25 A	32 A	16 A	25 A
Wiring Wire No. × size (mm²)	Outdoor unit power supply		2 × Min. 1.5	2 × Min. 2.5	2 × Min. 4	4 × Min. 1.5	4 × Min. 2.5
	Outdoor unit power supply earth		1 × Min. 1.5	1 × Min. 2.5	1 × Min. 4	1 × Min. 1.5	1 × Min. 1.5
	Indoor unit-Outdoor unit	*2	3 × 1.5 (Polar)	3 × 1.5 (Polar)	3 × 1.5 (Polar)	3 × 1.5 (Polar)	3 × 1.5 (Polar)
	Indoor unit-Outdoor unit earth	*2	1 × Min. 1.5	1 × Min. 1.5	1 × Min. 1.5	1 × Min. 1.5	1 × Min. 1.5
	Remote controller-Indoor unit	*3	2 × 0.3 (Non-polar)	2 × 0.3 (Non-polar)	2 × 0.3 (Non-polar)	2 × 0.3 (Non-polar)	2 × 0.3 (Non-polar)
Circuit rating	Outdoor unit L-N (single) Outdoor unit L1-N, L2-N, L3-N (3 phase)	*4	AC 230 V	AC 230 V	AC 230 V	AC 230 V	AC 230 V
	Indoor unit-Outdoor unit S1-S2	*4	AC 230 V	AC 230 V	AC 230 V	AC 230 V	AC 230 V
	Indoor unit-Outdoor unit S2-S3	*4	DC 24 V	DC 24 V	DC 24 V	DC 24 V	DC 24 V
	Remote controller-Indoor unit	*4	DC 12 V	DC 12 V	DC 12 V	DC 12 V	DC 12 V

*1. A breaker with at least 3 mm contact separation in each poles shall be provided. Use non-fuse breaker (NF) or earth leakage breaker (NV).
*2. Refer to 8-2.
*3. The 10 m wire is attached in the remote controller accessory.
*4. The figures are NOT always against the ground.
S3 terminal has DC 24 V against S2 terminal. However between S3 and S1, these terminals are NOT electrically insulataed by the transformer or other device.

Notes: 1. Wiring size must comply with the applicable local and national code.
2. Power supply cords and Indoor/Outdoor unit connecting cords shall not be lighter than polychloroprene sheathed flexible cord. (Design 245 IEC 57)
3. Install an earth longer than other cables.

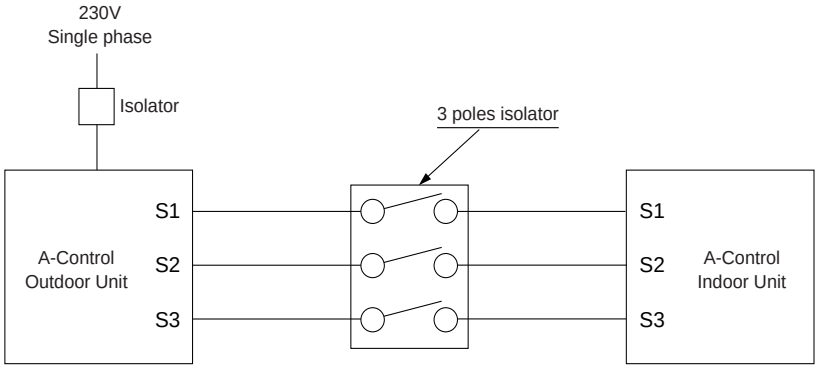

⚠ Warning:
In case of A-control wiring, there is high voltage potential on the S3 terminal caused by electrical circuit design that has no electrical insulation between power line and communication signal line. Therefore, please turn off the main power supply when servicing. And do not touch the S1, S2, S3 terminals when the power is energized. If isolator should be used between indoor unit and outdoor unit, please use 3-poles type.

1:1 system

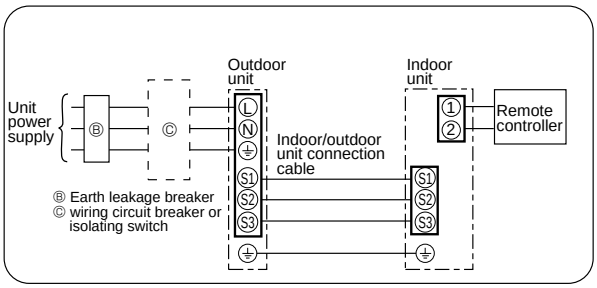

Synchronized twin and triple system Electrical wiring

• Synchronized twin

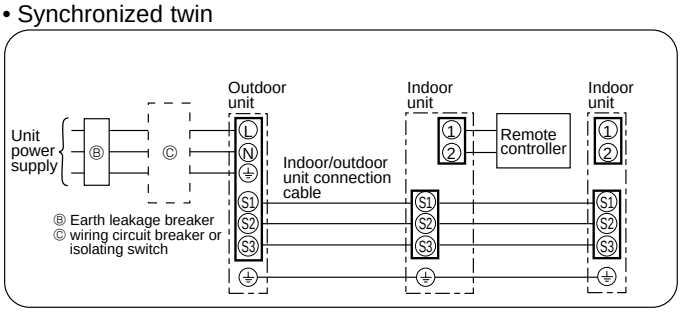

• Synchronized triple

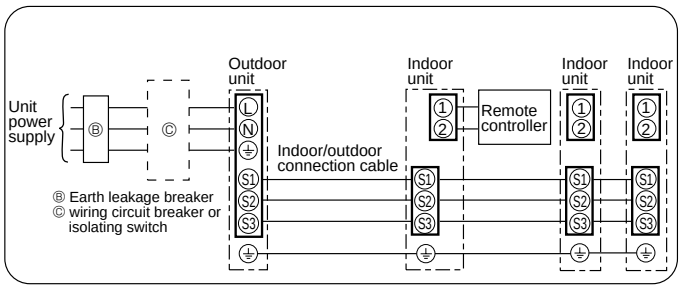

8-2. INDOOR-OUTDOOR CONNECTING CABLE

Cross section of cable	Wire size (mm^2)	Number of wires	Polarity	L(m) ✻6
Round 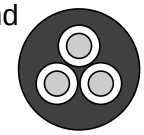	2.5	3	Clockwise : S1-S2-S3 ※ Pay attention to stripe of yellow and green	(50) ✻2
Flat 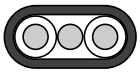	2.5	3	Not applicable (Because center wire has no cover finish)	Not applicable ✻5
Flat 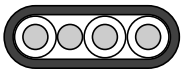	1.5	4	From left to right : S1-Open-S2-S3	(45) ✻3
Round 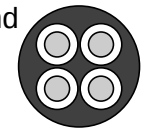	2.5	4	Clockwise : S1-S2-S3-Open ※ Connect S1 and S3 to the opposite angle	60 ✻4

✻1 : Power supply cords of appliances shall not be lighter than design 245 IEC or 227 IEC.
✻2 : In case that cable with stripe of yellow and green is available.
✻3 : In case of regular polarity connection (S1-S2-S3), wire size is 1.5mm^2.
✻4 : In case of regular polarity connection (S1-S2-S3).
✻5 : In the flat cables are connected as this picture, they can be used up to 80m.

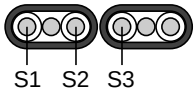

← (3C Flat cable ✕ 2)

✻6 : Mentioned cable length is just a reference value.
It may be different depending on the condition of installation, Humidity or materials, etc.

Be sure to connect the indoor-outdoor connecting cables directly to the units (no intermediate connections).
Intermediate connections can lead to communication errors if water enters the cables and causes insufficient insulation to ground or a poor electrical contact at the intermediate connection point.
(If an intermediate connection is necessary, be sure to take measures to prevent water from entering the cables.)

8-3. M-NET WIRING METHOD

(Points to notice)

(1) Outside the unit, transmission wires should stay away from electric wires in order to prevent electromagnetic noise from making an influence on the signal communication. Place them at intervals of more than 5cm. Do not put them in the same conduit tube.

(2) Terminal block (TB7) for transmission wires should never be connected to 220~240V power supply. If it is connected, electronic parts on M-NET p.c. board may be burn out.

(3) Use 2-core x 1.25mm^2 shield wire (CVVS, CPEVS) for the transmission wire. Transmission signals may not be sent or received normally if different types of transmission wires are put together in the same multi-conductor cable. Never do this because this may cause a malfunction.

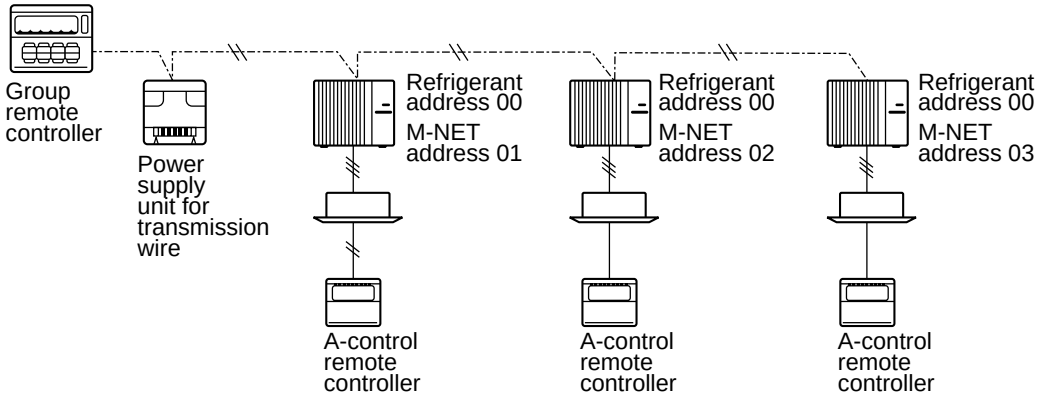

It would be ok if M-NET wire (non-polar, 2-cores) is arranged in addition to the wiring for A-control.

(4) Ground only one of any appliances through M-NET transmission wire (shield wire). Communication error may occur due to the influence of electromagnetic noise.

"Ed" error will appear on the LED display of outdoor unit.

"0403" error will appear on the central-control remote controller.

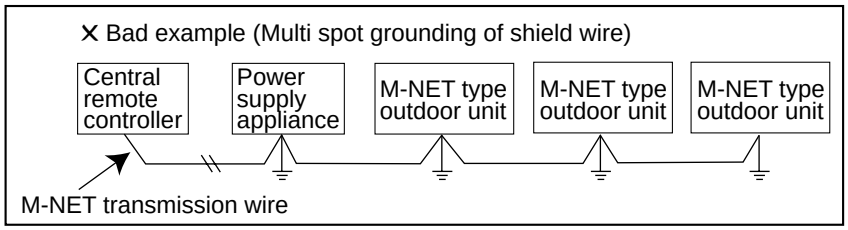

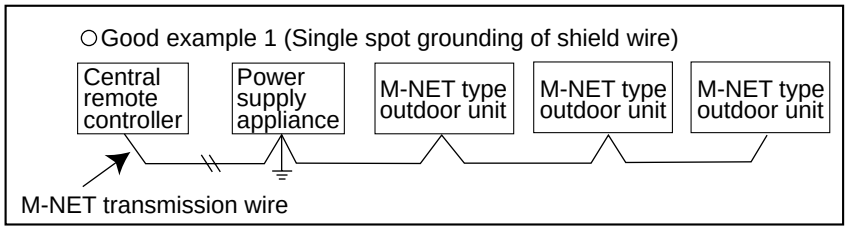

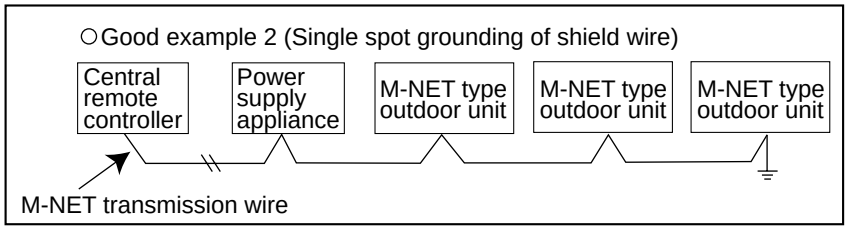

If there are more than two grounding spots on the shield wire, noise may enter into the shield wire because the ground wire and shield wire form one circuit and the electric potential difference occurs due to the impedance difference among grounding spots. In case of single spot grounding, noise does not enter into the shield wire because the ground wire and shield wire do not form one circuit.

To avoid communication errors caused by noise, make sure to observe the single spot grounding method described in the installation manual.

● **M-NET wiring**

(1) Use 2-core x 1.25mm^2 shield wire for electric wires.
(Excluding the case connecting to system controller.)

(2) Connect the wire to the M-NET terminal block.Connect one core of the transmission wire (non-polar) to A terminal and the other to B. Peel the shield wire, twist the shield part to a string and connect it to S terminal.

(3) In the system which several outdoor units are being connected, the terminal (A, B, S) on M-NET terminal block should be individually wired to the other outdoor unit's terminal, i.e. A to A, B to B and S to S.In this case, choose one of those outdoor units and drive a screw to fix an ground wire on the plate as shown on the right figure.

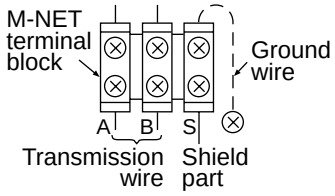

8-3-1. M-NET address setting

In A-control models, M-NET address and refrigerant address should be set only for the outdoor unit. Similar to Free Combo system, there is no need to set the address of outdoor unit and remote controller. To construct a central control system, the setting of M-NET address should be conducted only upon the outdoor unit. The setting range should be 1 to 50 (the same as that of the indoor unit in Free Combo system), and the address number should be consecutively set in a same group.

Address number can be set by using rotary switches (SW11 for ones digit and SW12 for tens digit), which is located on the M-NET board of outdoor unit. (Factory setting: all addresses are set to "0".)

<Setting example>

M-NET Address No.		1	2		50
Switng setting	SW11 ones digit			~	
	SW12 tens digit				

8-3-2. Refrigerant address setting

In case of multiple grouping system (multiple refrigerant circuits in one group), indoor units should be connected by remote controller wiring (TB5) and the refrigerant address needs to be set. Leave the refrigerant addresses to "00" if the group setting is not conducted. Set the refrigerant address by using DIP SW1-3 to -6 on the outdoor controller board. [Factory setting: all switches are OFF. (All refrigerant addresses are "00".)]

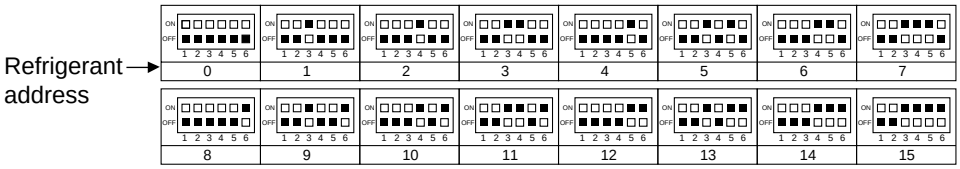

8-3-3. Regulations in address settings

In case of multiple grouping system, M-NET and refrigerant address settings should be done as explained in the above section. Set the lowest number in the group for the outdoor unit whose refrigerant address is "00" as its M-NET address.

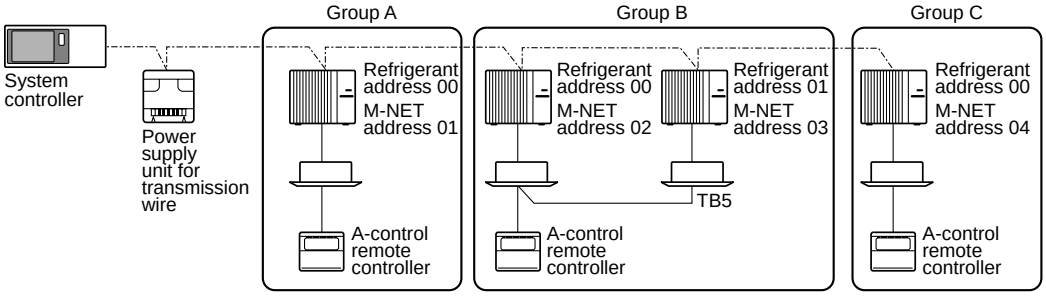

※ Refrigerant addresses can be overlapped if they are in the different group.

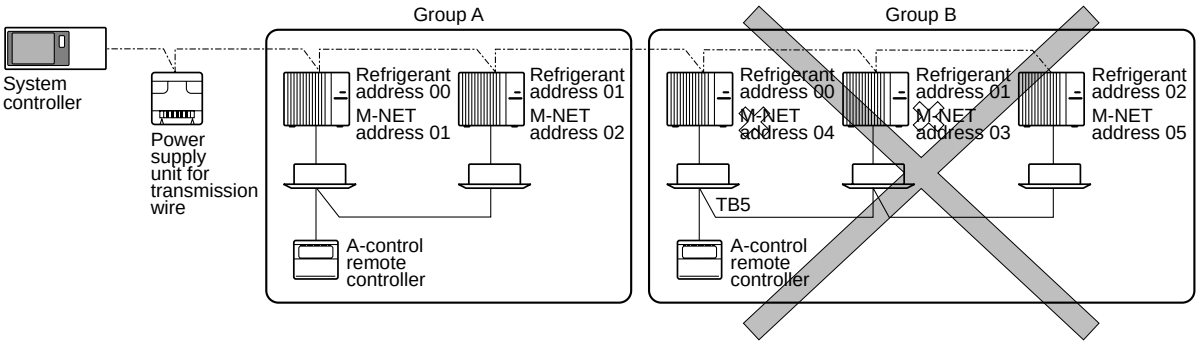

※ In group B, M-NET address of the outdoor unit whose refrigerant address is "00" is not set to the minimum in the group. As "3" is right for this situation, the setting is wrong. Taking group A as a good sample, set the minimum M-NET address in the group for the outdoor unit whose refrigerant address is "00".

9 REFRIGERANT SYSTEM DIAGRAM

PUH-P25VGAA.UK PUH-P35VGAA.UK PUH-P50VGAA.UK PUH-P60VGAA.UK PUH-P71VGAA.UK
PUH-P35YGAA.UK PUH-P50YGAA.UK PUH-P60YGAA.UK PUH-P71YGAA.UK

<4-way valve solenoid coil>
Heating : ON
Cooling : OFF

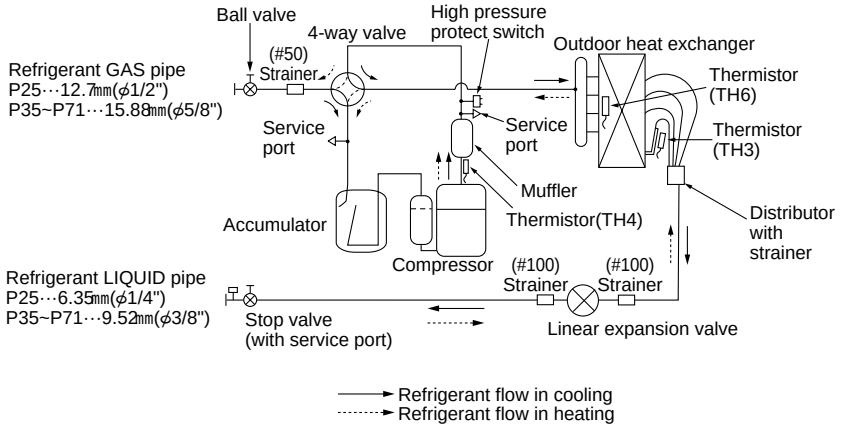

PUH-P100VGAA.UK
PUH-P100YGAA.UK

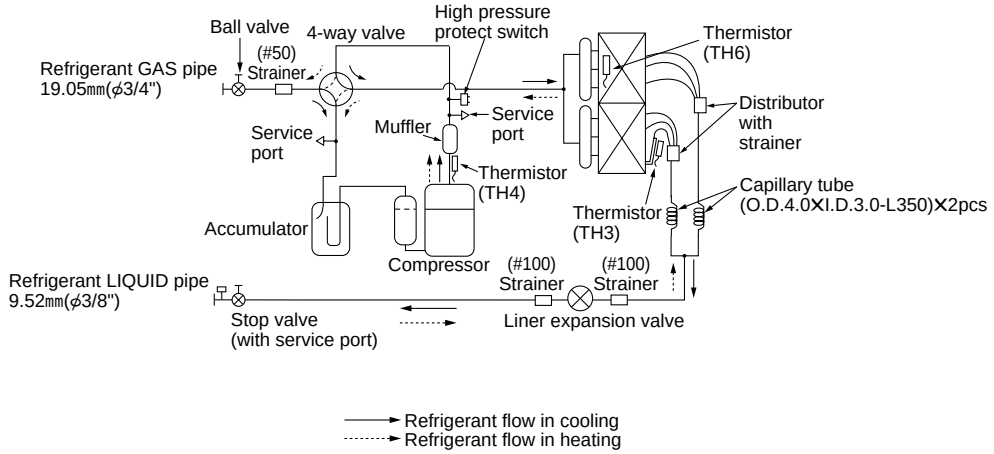

PUH-P125YGAA.UK
PUH-P140YGAA.UK

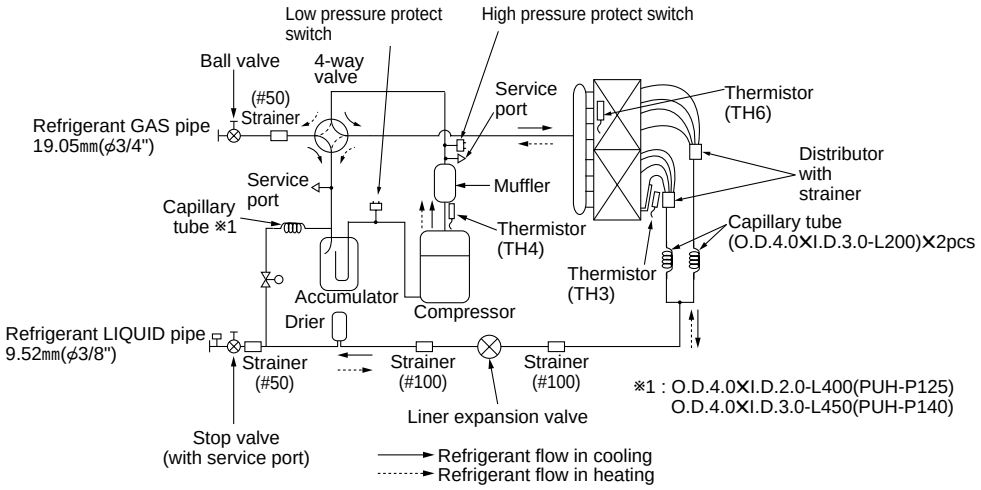

PU-P35VGAA.UK PU-P50VGAA.UK PU-P60VGAA.UK PU-P71VGAA.UK
PU-P35YGAA.UK PU-P50YGAA.UK PU-P60YGAA.UK PU-P71YGAA.UK

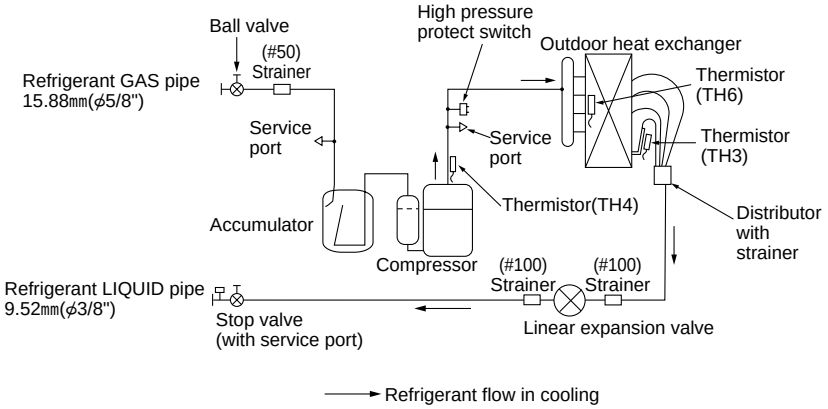

PU-P100VGAA.UK
PU-P100YGAA.UK

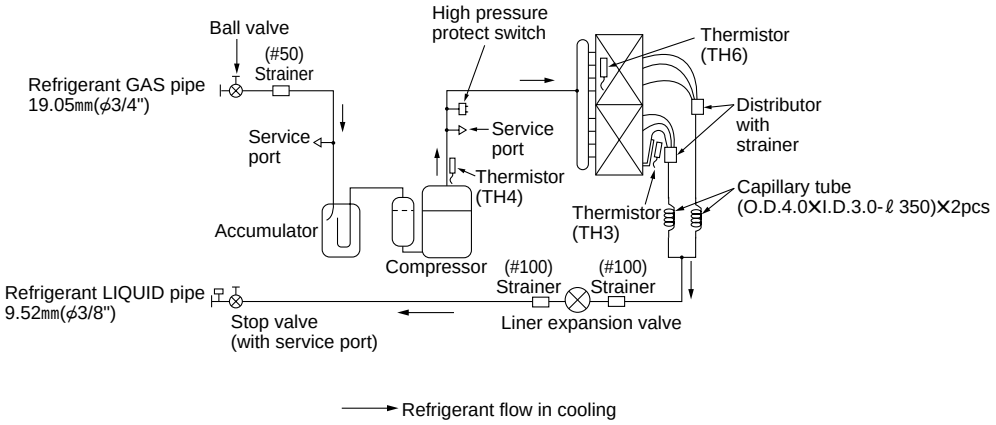

PU-P125YGAA.UK
PU-P140YGAA.UK

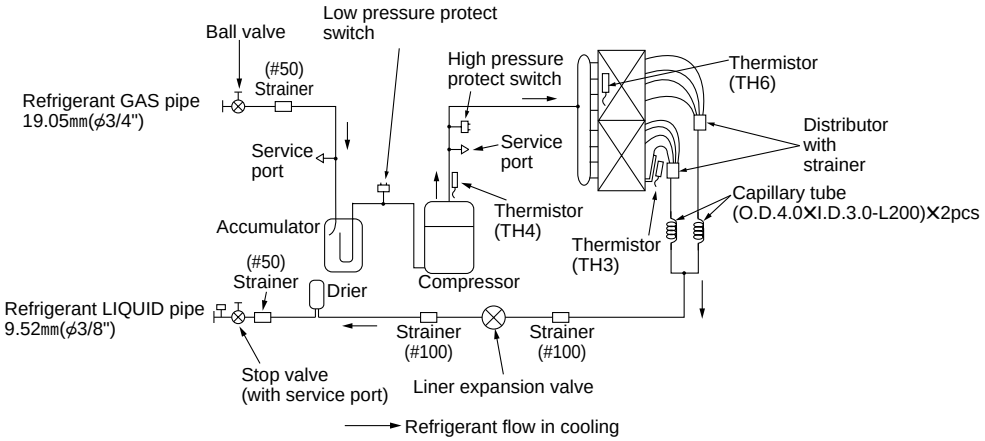

10 TROUBLESHOOTING

10-1. TROUBLESHOOTING

<Error code display by self-diagnosis and actions to be taken for service (summary)>

Present and past error codes are logged and displayed on the wired remote controller and control board of outdoor unit. Actions to be taken for service, which depends on whether or not the inferior phenomenon is reoccurring at service, are summarized in the table below. Check the contents below before investigating details.

Unit conditions at service	Error code	Actions to be taken for service (summary)
The inferior phenomenon is reoccurring.	Displayed	Judge what is wrong and take a corrective action according to “10-4. Self-diagnosis action table”.
	Not displayed	Conduct trouble shooting and ascertain the cause of the inferior phenomenon according to “10-5. Troubleshooting by inferior phenomena”.
The inferior phenomenon is not reoccurring.	Logged	①Consider the temporary defects such as the work of protection devices in the refrigerant circuit including compressor, poor connection of wiring, noise and etc. Re-check the symptom, and check the installation environment, refrigerant amount, weather when the inferior phenomenon occurred, matters related to wiring and etc. ②Reset error code logs and restart the unit after finishing service. ③There is no abnormality concerning of parts such as electrical component, controller board, remote controller and etc.
	Not logged	①Re-check the abnormal symptom. ②Conduct trouble shooting and ascertain the cause of the inferior phenomenon according to “10-5. Troubleshooting by inferior phenomena”. ③Continue to operate unit for the time being if the cause is not ascertained. ④There is no abnormality concerning of parts such as electrical component, controller board, remote controller and etc.

10-2. CHECK POINT UNDER TEST RUN

(1) Before test run

- After installation of indoor and outdoor units, piping work and electric wiring work, re-check that there is no refrigerant leakage, loosened connections and incorrect polarity.
- Measure impedance between the ground and the power supply terminal block(L, N) on the outdoor unit by 500V Merger and check that it is 1.0MΩ or over.

※Don’t use 500V Merger to indoor/outdoor connecting wire terminal block(S1, S2, S3) and remote controller terminal block (1, 2). This may cause malfunction.

- Make sure that test run switch (SW4) is set to OFF before turning on power supply.
- Turn on power supply twelve hours before test run in order to protect compressor.
- For specific models which requires higher ceiling settings or auto-recovery feature from power failure, make proper changes of settings referring to the description of “Selection of Functions through Remote Controller”.

Make sure to read operation manual before test run. (Especially items to secure safety.)

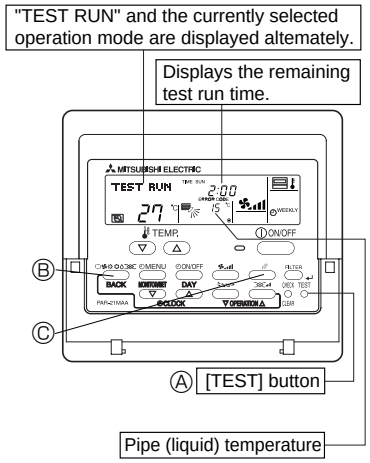

Operating procedures	
1. Turn on the main power supply.	While the room temperature display on the remote controller is "PLEASE WAIT", the remote controller is disabled. Wait until "PLEASE WAIT" disappears before using remote controller. "PLEASE WAIT" appears for about 2 minutes after power supply is turned on. ※1
2. Press Ⓐ (TEST) button twice.	The (TEST RUN) appears on the screen.
3. Press Ⓑ (OPERATION SWITCH) button.	Cooling mode: Check if cool air blows and water is drained. Heating mode: Check if warm air blows. (It takes a little while until warm air blows.)
4. Press Ⓒ (AIR DIRECTION) button.	Check for correct motion of auto-vanes.
5. Check the outdoor unit fan for correct running.	The outdoor unit features automatic capacity control to provide optimum fan speeds. Therefore, the fan keeps running at a low speed to meet the current outside air condition unless it exceeds its available maximum power. Then, in actuality, the fan may stop or run in the reverse direction depending on the outside air, but this does not mean malfunction.
6. Press the (ON/OFF) button to reset the test run in progress.	
7. Register the contact number.	

- In case of test run, the OFF timer will be activated, and the test run will automatically stop after two hours.
- The room temperature display section shows the pipe temperature of indoor units during the test run.
- Check that all the indoor units are running properly in case of simultaneous twin and triple operation. Malfunctions may not be displayed regardless of incorrect wiring.

※1 After turning on the power supply, the system will go into startup mode, "PLEASE WAIT" will blink on the display section of the room
temperature, and lamp(green) of the remote controller will flash.
As to INDOOR BOARD LED, LED1 will be lit up, LED2 will either be lit up in case the address is 0 or turned off in case the address is not 0. LED3 will blink.
As to OUTDOOR BOARD LED, LED1(green) and LED2(red) will light up. (After the startup mode of the system finishes, LED2(red) will be turned off.)
In case OUTDOOR BOARD LED is digital display, [□—] and [—□] will be displayed alternately every second.

- If one of the above operations doesn't function correctly, the causes written below should be considered. Find causes from the symptoms.

The below symptoms are under test run mode. "startup" in the table means the display status of ※1 written above.

Symptoms in test run mode		Cause
Remote Controller Display	**OUTDOOR BOARD LED Display** < > indicates digital display.	
Remote controller displays "PLEASE WAIT", and cannot be operated.	After "startup" is displayed, only green lights up. <00>	• After power is turned on, "PLEASE WAIT" is displayed for 2 minutes during system startup. (Normal)
After power is turned on, "PLEASE WAIT" is displayed for 3 minutes, then error code is displayed.	After "startup" is displayed, green(once) and red(once) blink alternately. <F1>	• Incorrect connection of outdoor terminal block (L_1, L_2, L_3 and S1, S2, S3.)
	After "startup" is displayed, green(once) and red(twice) blink alternately. <F3, F5, F9>	• Outdoor unit's safeguard installation connector is open.
No display appears even when remote controller operation switch is turned on. (Operation lamp does not light up.)	After "startup" is displayed, green(twice) and red(once) blink alternately. <EA. Eb>	• Incorrect wiring between the indoor and outdoor unit (Polarity is wrong for S1, S2, S3.) • Remote controller transmission wire short.
	After "startup" is displayed, only green lights up. <00>	• There is no outdoor unit of address 0. (Address is other than 0.) • Remote controller transmission wire burnout.
Display appears but soon disappears even when remote controller is operated.	After "startup" is displayed, only green lights up. <00>	• After canceling function selection, operation is not possible for about 30 seconds. (Normal)

※ Press the remote controller's (CHECK) button twice to perform self-diagnosis. See the table below for the contents of LCD display.

LCD	Contents of inferior phenomena	LCD	Contents of inferior phenomena
P1	Abnormality of room temperature thermistor	U1~UP	Malfunction outdoor unit
P2	Abnormality of pipe temperature thermistor/Liquid	F3~F9	Malfunction outdoor unit
P4	Abnormality of drain sensor	E0~E5	Remote controller transmitting error
P5	Drain overflow protection is working.	E6~EF	Indoor/outdoor unit communication error
P6	Freezing/overheating protection is working.	----	No error history
P8	Abnormality of pipe temperature	FFFF	No applied unit
P9	Abnormality of pipe temperature thermistor/Cond./Eva		
Fb	Abnormality of indoor controller board		

See the table below for details of the LED display (LED 1, 2, 3) on the indoor controller board.

LED1 (microcomputer power supply)	Lits when power is supplied.
LED2 (remote controller)	Lits when power is supplied for wired remote controller. The indoor unit should be connected to the outdoor unit with address "0" setting.
LED3 (indoor/outdoor communication)	Flash when indoor and outdoor unit are communicating.

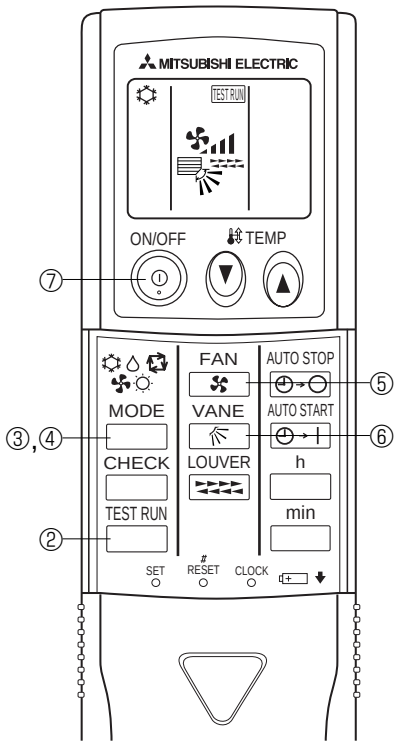

Test run [for wireless remote controller]

Measure an impedance between the power supply terminal block on the outdoor unit and ground with a 500V Megger and check that it is equal to or greater than 1.0MΩ.

① Turn on the main power to the unit.

② Press the TEST RUN button twice continuously.
(Start this operation from the status of remote controller display turned off.)
A TEST RUN and current operation mode are displayed.

③ Press the MODE ( ) button to activate COOL mode, then check whether cool air is blown out from the unit.

④ Press the MODE ( ) button to activate HEAT mode, then check whether warm air is blown out from the unit.

⑤ Press the FAN button and check whether strong air is blown out from the unit.

⑥ Press the VANE button and check whether the auto vane operates properly.

⑦ Press the ON/OFF button to stop the test run.

Note:
- **Point the remote controller towards the indoor unit receiver while following steps ② to ⑦.**
- **It is not possible to run the in FAN, DRY or AUTO mode.**

(2) Outdoor Unit

1) Check Items
- After installation of indoor and outdoor units, and tubing and electric wiring work, check that the unit is free from leaks of refrigerant, loosened connections, and incorrect polarity.
- Check that there is no negative phase and open phase. (The F1 message for negative phase and the F2 message for open phase will flash at digital indicator LED 1 on the outdoor substrate. If this happens, rewire correctly.)
- Measure the impedance between power terminals (Single phase: L,N,⏚/ triple phase: L1,L2,L3,⏚) and the ground with a 500V Merger and check that it is 1.0MΩ or more. Do not operate the equipment if measurement is less than 1.0mΩ. *Never conduct this operation on the outdoor connection wiring terminals (S1,S2,S3) as this causes damage.
- When there is no error at the outdoor unit.
  (If there is an error at the outdoor unit, it can be evaluated at LED 1 [digital display] of the outdoor substrate.)
- The stop valves are open both the liquid and gas sides.
  After checking the above, execute the test run in accordance with the following.

SW4 (Factory setting)

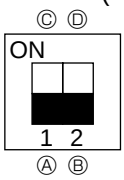

Ⓐ Stop
Ⓑ Cooling
Ⓒ Operation
Ⓓ Heating

2) Test run start and finish
- Operation from the indoor unit
  Execute the test run using the installation manual for the indoor unit.
- Operation from the outdoor unit.
  Execute settings for test run start, finish and operation mode (cooling, heating) using the DIP switch SW 4 on the outdoor substrate.

① **Set the operation mode (cooling, heating) using SW4-2.**
② **Turn ON SW 4-1, The operation mode for SW 4-2 will be adhered to, and the test run will commence.**
③ **Turn OFF SW 4-1 to finish the test run.**

- There may be a faint knocking noise emitted from the proximity of the fan during the test run. This is torque fluctuation occurring due to control of fan revolutions. There is no problem with the product.

Note:
The SW 4-2 operation mode cannot be changed during the test run. (To change run mode, stop the equipment with SW 4-1, change the operation mode, then restart test run with SW 4-1.)

10-3. HOW TO PRECEED "SELF-DIAGNOSIS"

10-3-1. When a Problem Occurs During Operation

If a problem occurs in the air conditioner, the indoor and outdoor units will stop, and the problem is shown in the remote controller display.
[CHECK] and the refrigerant address are displayed on the temperature display, and the error code and unit number are displayed alternately as shown below.

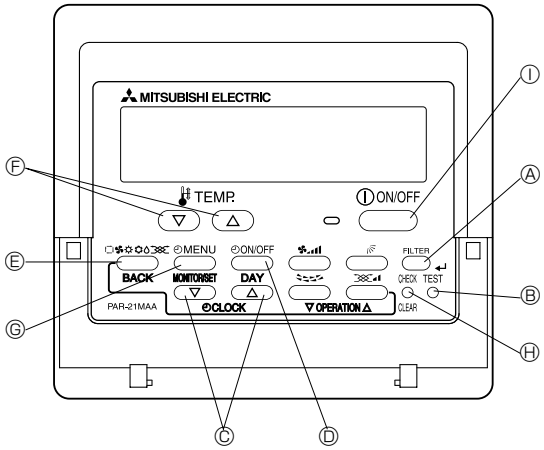

① (If the outdoor unit is malfunctioning, the unit number will be "00".)
② In the case of group control, for which one remote controller controls multiple refrigerant systems, the refrigerant address and error code of the unit that first experienced trouble (i.e., the unit that transmitted the error code) will be displayed.
③ To clear the error code, press the (ON/OFF) button.

(Alternating Display)

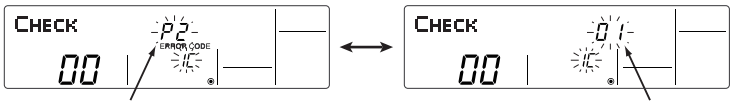

Error code (2 or 4 digits) Address (3 digits) or unit number (2 digits)

[When using remote-/handheld-controller combined operation, cancel the error code after turning off remote operation. During central control by a MELANS controller, cancel the error code by pressing the (ON/OFF) button.]

10-3-2. Self-Diagnosis During Maintenance or Service

Since each unit has a function that stores error codes, the latest check code can be recalled even if it is cancelled by the remote controller or power is shut off.

Check the error code history for each unit using the remote controller.
① Switch to self-diagnosis mode.
Ⓗ Press the (CHECK) button twice within three seconds. The display content will change as shown below.

② Set the unit number or refrigerant address you want to diagnose.
Ⓕ Press the [TEMP] buttons ((▽) and (△)) to select the desired number or address. The number (address) changes between [01] and [50] or [00] and [15].

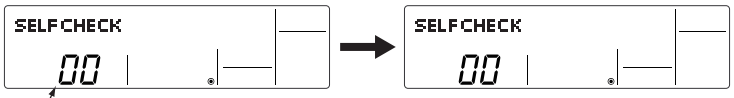

Unit number or refrigerant address to be diagnosed

The refrigerant address will begin to flash approximately three seconds after being selected and the self-diagnosis process will begin.

③ Display self-diagnosis results.
<When there is error code history>
(For the definition of each error code, refer to the indoor unit's installation manual or service handbook.)

(Alternating Display)

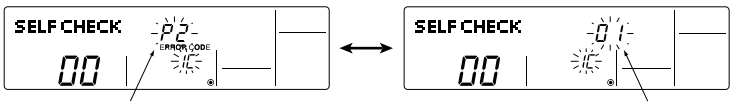

Error code (2 or 4 digits) Address (3 digits) or unit number (2 digits)

<When there is no error code history> <When there is no corresponding unit>

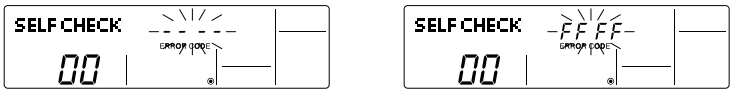

④ Reset the error history.
Display the error history in the diagnosis result display screen (see step ③).

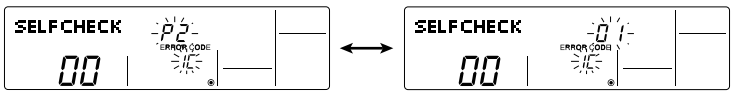

Ⓓ Press the (◴ ON/OFF) button twice within three seconds. The self-diagnosis address or refrigerant address will flash.

When the error history is reset, the display will look like the one shown below. However, if you fail to reset the error history, the error content will be displayed again.

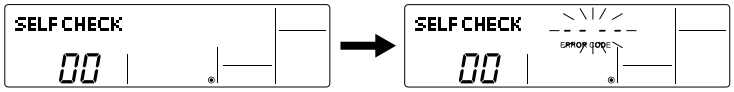

⑤ Cancel self-diagnosis.
Self-diagnosis can be cancelled by the following two methods.

Ⓗ Press the (CHECK) button twice within three seconds. → Self-diagnosis will be cancelled and the screen will return to the previous state in effect before the start of self-diagnosis.

⑤ Press the (① ON/OFF) button. → Self-diagnosis will be cancelled and the indoor unit will stop.

10-3-3. Remote Controller Diagnosis

If the air conditioner cannot be operated from the remote controller, diagnose the remote controller as explained below.

① First, check that the power-on indicator is lit.
If the correct voltage (DC12 V) is not supplied to the remote controller, the indicator will not light.
If this occurs, check the remote controller's wiring and the indoor unit.

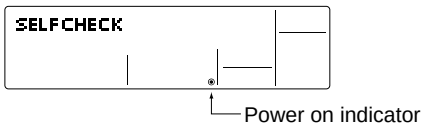

② Switch to the remote controller self-diagnosis mode.

Ⓗ Press the (CHECK) button for five seconds or more. The display content will change as shown below.

Ⓐ Press the (FILTER) button to start self-diagnosis.

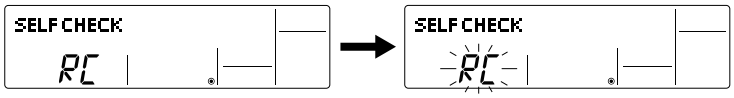

③ Remote controller self-diagnosis result

[When the remote controller is functioning correctly]

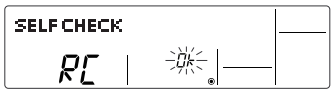

Check for other possible causes, as there is no problem with the remote controller.

[When the remote controller malfunctions]
(Error display 1) "NG" flashes. → The remote controller's transmitting-receiving circuit is defective.

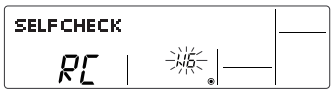

The remote controller must be replaced with a new one.

[Where the remote controller is not defective, but cannot be operated.]
(Error display 2) [E3], [6833] or [6832] flashes. → Transmission is not possible.

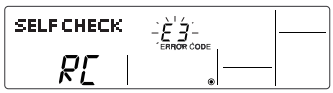

There might be noise or interference on the transmission path, or the indoor unit or other remote controllers are defective. Check the transmission path and other controllers.

(Error display 3) "ERC" and the number of data errors are displayed.
→ Data error has occurred.

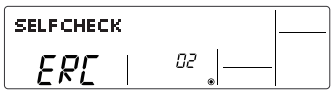

The number of data errors is the difference between the number of bits sent from the remote controller and the number actually transmitted through the transmission path. If such a problem is occurring, the transmitted data is affected by noise, etc. Check the transmission path.

☞ When the number of data errors is "02":
Transmission data from remote controller
Transmission data on transmission path

④ To cancel remote controller diagnosis

Ⓗ Press the (CHECK) button for five seconds or more. Remote controller diagnosis will be cancelled, "PLEASE WAIT" and operation lamp will flash. After approximately 30 seconds, the state in effect before the diagnosis will be restored.

10-3-4. Malfunction-diagnosis method by wireless remote controller

<In case of trouble during operation>

When a malfunction occurs to air conditioner, both indoor unit and outdoor unit will stop and operation lamp blinks to inform unusual stop.

<Malfunction-diagnosis method at maintenance service>

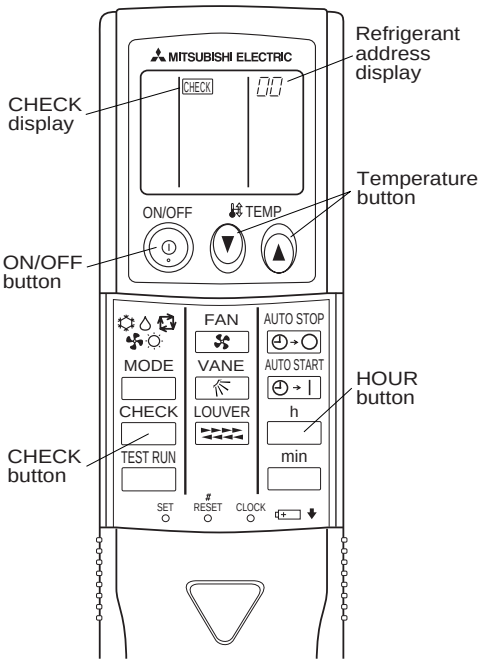

[Procedure]

1. Press the CHECK button twice.	• "CHECK" lights, and refrigerant address "00" flashes. • Check that the remote controller's display has stopped before continuing.
2. Press the temperature buttons.	• Select the refrigerant address of the indoor unit for the self-diagnosis. Note: Set refrigerant address using the outdoor unit's DIP switch (SW1). (For more information, see the outdoor unit installation manual.)
3. Point the remote controller at the sensor on the indoor unit and press the HOUR button.	• If an air conditioner error occurs, the indoor unit's sensor emits an intermittent buzzer sound, the operation light flashes, and the error code is output. (It takes 3 seconds at most for error code to appear.)
4. Point the remote controller at the sensor on the indoor unit and press the ON/OFF button.	• The check mode is cancelled.

• Refer to the following tables for details on the check codes.

[Output pattern A]

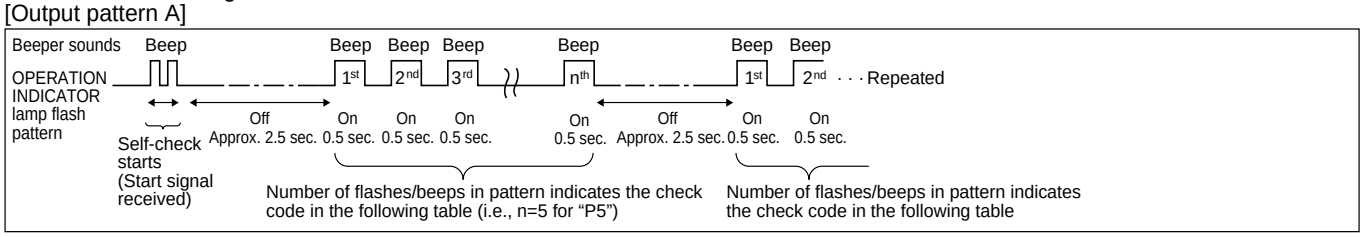

[Output pattern B]

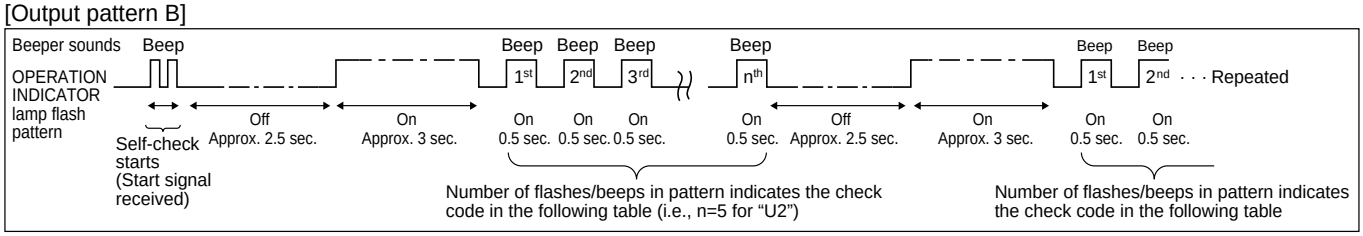

[Output pattern A] Errors detected by indoor unit

Wireless remote controller / Beeper sounds/OPERATION INDICATOR lamp flashes (Number of times)	Wired remote controller / Check code	Symptom	Remark
1	P1	Intake sensor error	As for indoor unit, refer to indoor unit's service manual.
2	P2	Pipe (TH2) sensor error	
	P9	Pipe (TH5) sensor error	
3	E6,E7	Indoor/outdoor unit communication error	
4	P4	Drain sensor error	
5	P5	Drain pump error	
	PA	Forced compressor stop	
6	P6	Freeing/Overheating safeguard operation	
7	EE	Communication error between indoor and outdoor units	
8	P8	Pipe temperature error	
9	E4, E5	Remote controller signal receiving error	
10	–	–	
11	–	–	
12	Fb	Indoor unit control system error (memory error, etc.)	
–	E0, E3	Remote controller transmission error	
–	E1, E2	Remote controller control board error	

[Output pattern B] Errors detected by unit other than indoor unit (outdoor unit, etc.)

Wireless remote controller / Beeper sounds/OPERATION INDICATOR lamp flashes (Number of times)	Wired remote controller / Check code	Symptom	Remark
1	E9	Indoor/outdoor unit communication error (Transmitting error) (Outdoor unit)	For details, check the LED display of the outdoor controller board.
2	UP	Compressor overcurrent interruption	
3	U3,U4	Open/short of outdoor unit thermistors	
4	UF	Compressor overcurrent interruption (When compressor locked)	
5	U2	Abnormal high discharging temperature/49C worked/ insufficient refrigerant	
6	U1,Ud	Abnormal high pressure (63H worked)/Overheating safeguard operation	
7	U5	Abnormal temperature of heat sink	
8	U8	Outdoor unit fan safeguard stop	
9	U6	Compressor overcurrent interruption/Abnormal of power module	
10	U7	Abnormality of super heat due to low discharge temperature	
11	U9,UH	Abnormality such as overvoltage or voltage shortage and abnormal synchronous signal to main circuit/Current sensor error	
12	–	–	
13	–	–	
14	Others	Other errors	

*1 If the beeper does not sound again after the initial two beeps to confirm the self-check start signal was received and the OPERATION INDICATOR lamp does not come on, there are no error records.

*2 If the beeper sounds three times continuously "beep, beep, beep (0.4 + 0.4 + 0.4 sec.)" after the initial two beeps to confirm the self-check start signal was received, the specified refrigerant address is incorrect.

10-4. SELF-DIAGNOSIS ACTION TABLE

<Abnormalities detected when the power is put on> (Note 1) The number in ( ) is the error cord of upper remote controller (M-NET)

Error Code	Meaning of error code and detection method	Case	Judgment and action
None	—	① No voltage is supplied to terminal block (TB1) of indoor unit. a) Power supply breaker is put off. b) Contact failure or disconnection of power supply terminal c) L1-phased open phase ② Electric power is not charged to power supply terminal of controller board. a) Contact failure of power supply terminal b) Disconnection of terminal R or 4/S on controller board ③ Defective outdoor controller board a) Fuse 6.3A on controller board is blown. b) Defective parts	① Check following items. a) Power supply breaker b) Connection of power supply terminal block (TB1). c) Connection of power supply terminal block (TB1). ② Check following items. a) Connection of power supply terminal block (TB1). b) Connection of terminal on controller board ③ Replace following items. a) Fuse 6.3A b) Controller board (When items above are checked but the units can not be repaired)
F1 (4103)	**Reverse phase detection, Power supply and indoor/outdoor unit connecting wire converse connection** 1. Three seconds after power on, judge reverse phase by detecting voltage phase of each phase. 2. Abnormal four minutes after power on if power supply and indoor/outdoor unit connecting wire have converse connection.	① L1, L2, L3 are not connected correctly. ② Converse wiring of outdoor power supply line (TB1) and indoor power supply wire (TB4)	① • Check outdoor power supply connection (TB1) • Replace two phases (for example phase L1 and phase L2) out of three phases of outdoor power supply line (TB1) ② Check wiring connection.
F2 (4102)	**L3-phased open phase detection** Detect open phase two seconds after power on.	① L3-phased open-phase	① Check power supply.
F3 (5202)	**63L connector open** Abnormal if 63L connector circuit is open for three minutes continuously after power supply. 63L: Low-pressure switch (PU/PUH-P125, 140YGAA.UK Only.)	① Disconnection or contact failure of 63L connector on outdoor controller board ② Disconnection or contact failure of 63L ③ 63L is working due to refrigerant leakage or defective parts. ④ Defective outdoor controller board	① Check connection of 63L connector on outdoor controller board. Refer to 10-7. ② Check the 63L side of connecting wire. ③ Check refrigerant pressure. Charge additional refrigerant. Check continuity by tester. Replace the parts if the parts are defective. ④ Replace outdoor controller board.
F4 (4124)	**The connector of 49C is open** Consider the unit abnormal when the circuit of connector (49C) remains open for three consecutive minutes with the power on. 49C: Inner thermostat (Compressor)	① The connector of 49C on outdoor controller board has contact failure or disconnection. ② The switch of 49C has contact failure or disconnection. ③ Power supply was turned on when 49C has been tripped. ④ 49C has been tripped (defective parts). ⑤ Outdoor controller board is defective.	① Check connection of 49C connector on outdoor controller board. Refer to 10-7. ② Check the 49C side of connecting wire. ③④ Check the continuity by tester. Replace defective parts. ⑤ Replace the outdoor controller board.
F7 (4118)	**Reverse phase detector circuit (controller board) fault** Abnormal if some of each phase detection signal is not input three seconds after power supply.	Detective outdoor controller board	Replace outdoor controller board.
F9 (4119)	**2 or more connectors open** Abnormal if two more out of connector (63L, 49C, 51CM) circuits are open for three minutes continuously after power on.	① Disconnection or contact failure of connector (63L, 49C, 51CM) on outdoor controller board ② Disconnection or contact failure of (63L, 49C, 51C). ③ Defective (63L, 49C, 51C) (defective parts) ④ Defective outdoor controller board.	① Check connection of (63L, 49C, 51CM) connector on outdoor controller board. Refer to 10-7. ② Check the (63L, 49C, 51CM) side of connecting wire. ③ Check continuity by tester. Replace the parts if the parts are defective. ④ Replace outdoor controller board.
FA (4108)	**51CM connector open** Abnormal if 51CM connector circuit is open for three minutes continuously after power on. 51CM: Thermal Relay	① Disconnection or contact failure of 51CM connector on outdoor controller board ② Disconnection or contact failure of 51CM ③ Defective 51CM (defective parts) ④ Defective outdoor controller	① Check connecting wire. ② Check connecting wire. ③ Check continuity by tester. Replace the parts if the parts are defective. ④ Replace outdoor controller board.

Error Code	Meaning of error code and detection method	Case	Judgment and action
EA (6844)	**Indoor/outdoor unit connector mis-wiring, excessive number of units (5 units or more)** 1. Outdoor controller board can automatically check the number of connected indoor units. Abnormal if the number of connected indoor units can not be set within four minutes after power on because of mis-wiring of indoor/outdoor unit connecting wire and the like. 2. Abnormal if outdoor controller board recognizes the number of connected indoor units as “5 units or more”.	① Contact failure or mis-wiring of indoor/outdoor unit connecting wire. ② Diameter or length of indoor/outdoor unit connecting wire is out of specified capacity. ③ Five or more indoor units are connected to one outdoor unit. ④ Defective transmitting receiving circuit of outdoor controller board ⑤ Defective transmitting receiving circuit of indoor controller board ⑥ Noise has entered into power supply or indoor/outdoor unit connecting wire. ⑦ Remote controller is wired up among indoor units (twin, triple or quadro units). ⑧ Two or more outdoor units has refrigerant address “0.” (In case of group control).	① Check disconnection or looseness or polarity of indoor/outdoor unit connecting wire of indoor and outdoor units. ② Check diameter and length of indoor/outdoor unit connecting wire. Outdoor-indoor units’ interval: 50m maximum Indoor-indoor units’ interval: 30m maximum Also check if the connection order of flat cable (VVF etc.) is S1, S2, S3. ③ Check the number of indoor units that are connected to one outdoor unit. (If EA is detected.) ④⑤ Put the power off, and on again to check. Replace outdoor controller board or indoor controller board if abnormality is displayed again. Check the indoor/ outdoor unit connecting wire. ⑥ Inspect transmission line to solve the problem. ⑦ Wire the remote controller to one of the multiple indoor units. ⑧ Set the refrigerant address of outdoor units with different number starting from “0.” ⑨ Unless the wire has contact failure, disconnect CN2S on indoor power supply board to measure the voltage. When CN2S does not have a current of DC12V to DC16V, replace the indoor power supply board. ※ The descriptions above, ①-⑨, are for EA, Eb and EC.
Eb (6845)	**Mis-wiring of indoor/outdoor unit connecting wire (converse wiring or disconnection)** Outdoor controller board can automatically set the unit number of indoor units. Abnormal if the indoor unit number can not be set within four minutes after power on because of mis-wiring (converse wiring or disconnection) of indoor/outdoor unit connecting wire.	① Contact failure or mis-wiring of indoor/outdoor unit connecting wire ② Diameter or length of indoor/outdoor unit connecting wire is out of specified capacity. ④ Defective transmitting receiving circuit of outdoor controller board ⑤ Defective transmitting receiving circuit of indoor controller board ⑥ Noise has entered into power supply or indoor/outdoor unit connecting wire. ⑦ Remote controller is wired up among indoor units (twin, triple or quadro units). ⑧ Two or more outdoor units has refrigerant address “0.” (In case of group control). ⑨ Outdoor power supply board is defective.	
EC (6846)	**Start-up time over** The unit can not finish start-up process within four minutes after power on.	① Contact failure of indoor/outdoor unit connecting wire ② Diameter or length of indoor/outdoor unit connecting wire is out of specified capacity. ⑥ Noise has entered into power supply or indoor/outdoor unit connecting wire. ⑦ Remote controller is wired up among indoor units (twin, triple or quadro units). ⑧ Two or more outdoor units has refrigerant address “0.” (In case of group control).	
Ed (0403)	**Serial communication error** The communication between outdoor controller board and M-NET p.c. board is not available.	① Breaking of wire or contact failure of connector between outdoor controller board and M-NET p.c. board. ② Contact failure of M-NET p.c. board power supply line ③ Entrance of noise into transmission wire ④ Defective transmitting receiving circuit of M-NET p.c. board ⑤ Defective serial transmitting receiving circuit of outdoor controller board	① Check disconnection, looseness, or breaking of connecting wire between outdoor controller board CN1 and M-NET p.c. board CN5. ② Check departure or looseness of M-NET p.c. board power supply line (CND-TB1). ③ Replace M-NET p.c. board. ④ Replace outdoor controller board.

<table>
<tr><th>Error Code</th><th>Meaning of error code and detection method</th><th>Case</th><th>Judgment and action</th></tr>
<tr><td>U1
(1302)</td><td>Abnormal high pressure (High-pressure switch 63H worked)
Abnormal if high-pressure switch 63H worked (more than 3.24 MPa) during compressor operation.
63H: High-pressure switch
✻ Use current sensor to detect work or return of 63H.</td><td>① Short cycle of indoor unit
② Clogged filter of indoor unit
③ Decreased airflow caused by dirt of indoor fan
④ Dirt of indoor heat exchanger
⑤ Locked indoor fan motor
⑥ Malfunction of indoor fan motor
⑦ Defective operation of stop valve (Not full open)
⑧ Clogged or broken pipe
⑨ Locked outdoor fan motor
⑩ Malfunction of outdoor fan motor
⑪ Short cycle of outdoor unit
⑫ Dirt of outdoor heat exchanger
⑬ Disconnection or contact failure of 63H connection
⑭ Defective outdoor controller board
⑮ Defective action of liner expansion valve
⑯ Refrigerant overcharge</td><td>①-⑥ Check indoor unit and repair defectives.
⑦ Check full open stop valve.
⑧ Check piping and repair defectives.
⑨-⑫ Check indoor unit and repair defectives.
⑬,⑭ Put the power off and check UH display when the power is put again.
Follow the UH display if UH is displayed.
⑮ Check linear expansion valve.
Refer to 10-6.
⑯ Replace refrigerant.</td></tr>
<tr><td>U1</td><td>Abnormal low current or open phase
• An extreme degradation of current value causes abnormal stop.
• Abnormal if current detected phase (V-phase) is open phase after first compressor start-up after supplying the power by three phase power supply model.
• When compressor is operating, compressor is suspended under the following condition: and when current detector (CT) detects a current, which is lower than the detected current specified in the table below, under the following condition:

<Condition>
① For PUH-P25V and PU/PUH-P35 ~ P100V
Current detector (CT) has detected a current, which is lower than the detected current specified in the table below, for 0.7-0.8 second.
② For PU/PUH-P35 ~ P140Y
Current detector (CT) has detected a current, which is lower than the detected current specified in the table below, for 0.4-0.5 second.
[A]
<table>
<tr><th>Model</th><th>Detected current</th><th>Model</th><th>Detected current</th></tr>
<tr><td>P25V</td><td>1.0</td><td>P71V</td><td>2.4</td></tr>
<tr><td>P35V</td><td>1.3</td><td>P71Y</td><td>1.0</td></tr>
<tr><td>P35Y</td><td>1.0</td><td>P100V</td><td>1.0</td></tr>
<tr><td>P50V</td><td>1.6</td><td>P100Y</td><td>1.0</td></tr>
<tr><td>P50Y</td><td>1.0</td><td>P125Y</td><td>1.5</td></tr>
<tr><td>P60V</td><td>1.8</td><td>P140Y</td><td>1.7</td></tr>
<tr><td>P60Y</td><td>1.0</td><td></td><td></td></tr>
</table></td><td>① Shortage of refrigerant
② Abnormal pressure degradation by pomp down operation
③ V-phased open phase of compressor
④ Abnormal compressor
Not abnormal if V is instantly displayed when the main power is put off.</td><td>① Check if refrigerant pressure is not degraded.
② Check current of compressor operation when abnormality occurred.
③ Check wiring of compressor.

④ Check or replace compressor.</td></tr>
<tr><td>U2
(1102)</td><td>Abnormal high discharging temperature
Abnormal if discharging temperature thermistor (TH4) exceeds following temperature during compressor operation.
Normal operation: 115℃ (P25-P100)/
125℃ (P125,P140)
or more for three minutes continuously or
135℃
During defrosting: 135℃</td><td>① Over-heated compressor operation caused by shortage of refrigerant
② Defective operation of stop valve
③ Defective thermistor
④ Defective outdoor controller board
⑤ Defective action of linear expansion valve</td><td>① Check intake super heat.
Check leakage of refrigerant.
Charge refrigerant.
② Check if stop valve is full open.
③④ Put the power off and check if U3 is displayed when the power is put again.
When U3 is displayed, refer to “Judgement and action” for U3.
⑤ Check linear expansion valve.
Refer to 10-6.</td></tr>
</table>

Error Code	Meaning of error code and detection method	Case	Judgment and action
U2 (1501)	**Abnormal shortage of refrigerant** Abnormal if intake super heat exceeds following temperature during heating compressor operation. 70℃ or more, and indoor pipe <condenser- evaporator> temperature (TH5) is 35℃ or less.	① Leakage or shortage of refrigerant ② Defective operation of stop valve (not full open) ③ Defective thermistor (TH4, TH5, TH6) ④ Defective outdoor controller board ⑤ Defective action of electric expansion valve	① Check leakage of refrigerant. Charge refrigerant. ② Check if stop valve is full open. ③④ Put the power off and check if U3 or U4 is displayed when the power is put again. When U3 or U4 is displayed, refer to "Judgement and action" for U3 or U4. ⑥ Check linear expansion valve. Refer to 10-6
U3 (5104)	**Open/short circuit of discharging thermistor (TH4)** Abnormal if open (0℃ or less) or short (216℃ or more) is detected during compressor operation. (Detection is inoperative for five minutes of compressor starting process and for 10 minutes after defrosting.)	① Disconnection or contact failure of connector (TH4) on the indoor controller board. ② Defective thermistor ③ Defective outdoor controller board	① Check contact of connector (TH4) on the indoor controller board. Refer to 10-7 Check breaking of the lead wire for thermistor (TH4). Refer to 10-6 ② Check resistance value of thermistor (Refer to 10-6.), or check temperature by microcomputer(Mode switch of SW2). ③ Replace outdoor controller board.
U4 (5105) (5107)	**Open/short circuit of the liquid pipe thermistor (TH3) or outdoor Condenser-Evaporator pipe thermistor (TH6)** Abnormal if open (-39℃ or less) or short (88℃ or more) is detected during compressor operation. (Detection is inoperative for seven minutes after 10 seconds of compressor starting and for 10 minutes after defrosting.)	① Disconnection or contact failure of connector (TH3/TH6) on the indoor controller board. ② Defective thermistor ③ Defective outdoor controller board	① Check contact of connector (TH3/TH6) on the indoor controller board. Refer to 10-7. Check breaking of the lead wire for thermistor (TH3/TH6). Refer to 10-6. ② Check resistance value of thermistor (Refer to 10-6.), or check temperature by microcomputer(Mode switch of SW2). ③ Replace outdoor controller board.
U6 (4101)	**Compressor over current (overload) breaking (only P35Y-P140Y)** Abnormal if current value exceeds overload set value during compressor operation. P35 ·····4.5 P50 ·····5.8 P60 ·····6.4 P71 ·····8.0 P100 ·····9.0 P125 ·····15.0 P140 ·····17.0	① Gas pipe side ball valve and liquid pipe side stop valve are shut during operation. ② Abnormal compressor ③ Abnormal power supply voltage ④ Overload operation	① Open ball valve and stop valve. ② Check or replace compressor. Refer to 5-2. ③ Check power supply voltage. ④ Check short cycle.
Ud (1504)	**Over heat protection (over-load operation protection/abnormal fan)** Abnormal if pipe thermistor detects the value that exceeds set value during compressor operation. P25-P140 ··70℃	① In cooling mode: defective outdoor fan (fan motor) or short cycle of air path ② Defective thermistor ③ Defective outdoor controller board	① Check outdoor fan (fan motor) Refer to 10-6. ②④ Put the power off and operate again to check if U4 is displayed. If U4 is displayed, follow the U4 processing direction.
UE (1302)	**Abnormal High pressure (63H worked)** This error is detected (3.24MPa) from 63H action within 20 seconds of compressor starting in the first heating mode after power on. 63H: high-pressure switch	① Gas pipe side ball valve and liquid pipe side stop valve are shut during operation. ② Disconnection or contact failure of 63H ③ Defective outdoor controller board ④ Power supply reset is detected while indoor filter clogs and overload heating operation. ⑤ Defective outdoor controller board ⑥ Defective action of linear expansion valve	① Open ball valve and stop valve. ②③ Put the power off, and operate again to check if F5 is displayed. If F5 is displayed, follow the F5 processing direction. ④ Check indoor filter. ⑤ Replace outdoor controller board. ⑥ Check linear expansion valve. Refer to 10-6.
UL (1300)	**Abnormal low pressure (63L worked)** Abnormal if connector (63L) is open (under- 0.03MPa) during compressor operation.	① Gas pipe side ball valve and liquid pipe side stop valve are shut during operation. ② Disconnection or contact failure of connector (63L) on outdoor controller board. ③ Disconnection or contact failure of 63L. ④ Defective outdoor controller board ⑤ Leakage or defective of refrigerant ⑥ Defective action of linear expansion valve	① Open ball valve and stop valve. ②③④ Put the power off and on again to check if F3 is displayed on restarting. If F3 is displayed, follow the F3 processing direction. ⑤ Leakage or defective of refrigerant ⑥ Check linear expansion valve Refer to 10-6.

Note: E1, E2 and E4 to E7, refer to indoor unit service manual.

Error Code	Meaning of error code and detection method	Case	Judgment and action
UF (4100)	**Compressor over current (start-up locked) breaking** Abnormal if compressor current exceeds 1.2 times of overload set value.	① Abnormal compressor ② Clogged indoor filter ③ Open-phase compressor	① Check compressor. Refer to 5-2. ② Check indoor unit and repair defective. ③ Check connection.
UH (5300)	**Current sensor error** Abnormal if compressor current is not detected on first compressor start-up after power supply is put on.	① Disconnection or contact failure of connector (52C) on outdoor controller board ② Disconnection or contact failure of coil 52C ③ Defective outdoor controller board ④ Defective parts of 52C ⑤ Compressor V-phased wire does not penetrate through current detector.	①② Check connection. ③ Replace outdoor controller board. ④ Check 52C. ⑤ Check wiring.
E0 (No display)	**Remote controller communication error (Signal receiving error)** (1) Abnormal if any signal from IC of refrigerant address “0” could not normally received for three minutes. (2) Abnormal if sub remote controller could not receive any signal for two minutes.	① Defective communication circuit of remote controller ② Defective communication circuit of indoor controller board of refrigerant address “0”. ③ Noise has entered transmission wire of remote controller. ④ All remote controllers are set as “sub” remote controller. In this case, E4 is displayed at outdoor LED, and E0 is displayed at remote controller. ⑤ Wiring regulations are not observed. •Length of wires •Number of remote controllers •Diameter of wires •Number of indoor units	①②③ Diagnose remote controller Dispose as follows according to diagnosis result. a) When “RC OK” is displayed, Remote controllers have no problem. Put the power off, and on again to check. If, “PLEASE WAIT” is displayed for four minutes or more, replace indoor controller board. b) When “RC NG” is displayed, Replace remote controller. c) When “RC E3” or “ERC 00-66” is displayed, noise may be causing abnormality. ④ Set one of the remote controllers “main”, if outdoor LED is E4 while E0 is displayed at remote controller.
E3 (No display)	**Remote controller communication error (Transmitting error)** (1) Abnormal if sub remote controller could not find blank of transmission path for six seconds. (2) Abnormal if remote controller could not finish transmitting 30 times continuously.	① Defective communication circuit of remote controller. ② Noise has entered transmission wire of remote controller. ③ Two or more remote controllers are set as "main."	
E8 (6840)	**Indoor/outdoor unit communication error (Signal receiving error) (Outdoor unit)** (1) Abnormal if outdoor controller could not receive anything normally for three minutes.	① Contact failure of indoor/outdoor unit connecting wire ② Defective communication circuit of indoor controller board ③ Defective communication circuit of indoor controller board ④ Noise has entered indoor/ outdoor unit connecting wire.	① Check disconnection or looseness of indoor/ outdoor unit connecting wire of indoor or outdoor units. ②③④ Put the power off, and on again to check. Replace indoor controller board or outdoor controller board if abnormality is displayed again.
E9 (6841)	**Indoor/outdoor unit communication error (Transmitting error) (Outdoor unit)** (1) Abnormal if “0” receiving is detected 30 times continuously though indoor controller has transmitted “1”. (2) Abnormal if outdoor controller could not find blank of transmission path for three minutes.	① Defective communication circuit of outdoor controller ② Noise has entered power supply. ③ Noise has entered indoor/ outdoor unit connecting wire. ④ Indoor/ outdoor unit connecting wire has contact failure. ⑤ Defective communication circuit between indoor and outdoor unit on indoor controller board.	①②③ Put the power off, and on again to check. Replace outdoor controller board if abnormality is displayed again.

Error Code	Meaning of error code and detection method	Case	Judgment and action
EF (6607 or 6608)	**Not defined error code** This code is displayed when not defined error code is received.	① Noise has entered transmission wire of remote controller. ② Noise has entered indoor/ outdoor unit connecting wire.	①② Put the power off, and on again to check. Replace indoor controller board or outdoor controller board if abnormality is displayed again.
Ed (0403)	**Serial communication error** Abnormal if communication between outdoor controller circuit board and M-NET board is not available.	① Breaking of wire or contact failure of connector between outdoor controller circuit board and M-NET board ② Contact failure of M-NET board power supply line ③ Noise has entered into M-NET transmission wire.	① Check disconnection, looseness, or breaking of connection wire between outdoor controller circuit board (CNMNT) and M-NET board (CN5). ② Check disconnection, looseness, or breaking of connection wire between outdoor controller circuit board(CNMNT) and M-NET board (CND). ③ Check M-NET transmission wiring method.

<M-NET communication error>

(Note) “Indoor unit” in the text indicates M-NET p.c. board in outdoor unit.

Error Code	Meaning of error code and detection method	Case	Judgment and action
A0 (6600)	**Address duplicate definition** This error is displayed when transmission from the units of same address is detected. Note) The address and attribute displayed at remote controller indicate the controller that detected abnormality.	① There are two or more same address of controller of outdoor unit, indoor unit, FRESH MASTER, or LOSSNAY. ② Noise has entered into transmission signal and signal was transformed.	Search the unit with same address as abnormality occurred. If the same address is found, shut of the power supply of outdoor unit and indoor unit and FRESH MASTER or LOSSNAY at the same time for two minutes or more after the address is corrected, and put the power on again. Check transmission waveform or noise on transmission wire.
A2 (6602)	**Hard ware error of transmission Pline** Transmission processor intended to transmit “0”, but “1” appeared on transmission wire. Note) The address and attribute display at remote controller indicate the controller that detected abnormality.	① Error is detected if waveform is transformed when wiring works of transmission wire of outdoor unit, indoor unit, FRESH MASTER or LOSSNAY are done, or polarity is changed with the power on and transmission data collide each other. ② Defective transmitting receiving circuit of transmission processor ③ Transmission data is changed by the noise on transmission.	① If the works of transmission wire is done with the power on, shut off the power supply of outdoor unit and indoor unit and FRESH MASTER or LOSSNAY at the same time for two minutes or more, and put the power on again. ② Check transmission waveform or noise on transmission wire.
A3 (6603)	**BUS BUSY** 1. Over error by collision damage Abnormal if transmitting is not possible for 8-10 minutes continuously because of collision of transmission. 2. Data could not reach transmission wire for 8-10 minutes continuously because of noise or etc. Note) The address and attribute displayed at remote controller indicate the controller that detected abnormality.	① Transmission processor could not transmit because short cycle voltage of noise and the like have entered into transmission wire continuously. ② Transmission quantity has increased and transmission is not possible because there was wiring mistake of terminal block for transmission wire (TB3) and terminal block for central control (TB7) in outdoor unit. ③ Transmission are mixed with others and occupation rate on transmission wire rose because of defective repeater (a function to connector or disconnect transmission of control and central control system) of outdoor unit, then abnormality is detected.	① Check if transmission wire of indoor unit, FRESH MASTER, LOSSNAY, or remote controller is not connected to terminal block for central control (TB7) of outdoor unit. ② Check if transmission wore of indoor unit, FRESH MASTER or LOSSNAY is not connected to terminal block for transmission wire of outdoor unit. ③ Check if terminal block for transmission wire (TB3) and terminal block for central control (TB7) is not connected. ④ Check transmission waveform or noise on transmission wire.
A6 (6606)	**Communication error with communication Pline** Defective communication between unit processor and transmission processor Note) The address and attribute display at remote controller indicate the controller that detected abnormality.	① Data of transmission processor or unit processor is not transmitted normally because of accidental trouble such as noise or thunder surge. ② Address forwarding from unit processor is not transmitted normally because of defective transmission processor hardware.	Shut of the power supply of outdoor unit and indoor unit and FRESH MASTER or LOSSNAY at the same time for two minutes or more, and put the power on again. System returns normally if abnormality was accidental malfunction. If the same abnormality generates again, abnormality-generated controller may be defective.

Error Code	Meaning of error code and detection method	Case	Judgment and action
A7 (6607)	**NO ACK** 1. Transmitting side controller detects abnormal if a massage was transmitted but there is no reply (ACK) that a massage was received. Transmitting side detects abnormality every 30 seconds, six times continuously. Note) The address and attribute displayed at remote controller is indicate the controller that did not reply (ACK).	Common factor that has no relation with abnormality source. ① The unit of former address does not exist as address switch has changed while the unit was energized. ② Extinction of transmission wire voltage and signal is caused by over-range transmission wire. • Maximum distance ·····200m • Remote controller line ··(12m) ③ Extinction of transmission wire voltage and signal is caused by type-unmatched transmission wire. Type ····· With shield wire- CVVS, CPEVS With normal wire (no shield)- VCTF, VCTFK, CVV CVS, VVR, VVF, VCT Diameter····125mm² or more ④ Extinction of transmission wire voltage and signal is caused by over-numbered units. ⑤ Accidental malfunction of abnormality-detected controller (noise, thunder surge) ⑥ Defective of abnormality-generated controller	**Always try the followings when the error "A7" occures.** ① Shut off the power supply of outdoor unit, indoor unit,and FRESH MASTER or LOSSNAY at the same time for two minutes or more, and put the power on again. If malfunction was accidental, the unit returns to normal. ② Check address switch of abnormality-generated address. ③ Check disconnection or looseness of abnormality-generated or abnormality-detected transmission wire (terminal block and connector) ④ Check if tolerance range of transmission wire is not exceeded. ⑤ Check if type of transmission wire is correct or not. If there were some trouble of ①-⑤ above, repair the defective, then shut off the power supply of outdoor unit and indoor unit and FRESH MASTER or LOSSNAY at the same time for two minutes or more, and put the power on again. • If there was no trouble with ①-⑤ above in single refrigerant system (one outdoor unit), controller of displayed address or attribute is defective. • If there was no trouble with ①-⑤ above in different refrigerant system (two or more outdoor units), judge with ⑥. ⑥ If address of abnormality source is the address that should not exist, there is the unit that memorizes nonexistent address information. Delete useless address information with manual setting function of remote controller. Only the system FRESH MASTER or LOSSNAY are connected to, or the system that is equipped with group setting of different refrigerant system. If there was no trouble with ①-⑥ above, replace the controller board of displayed address or attribute. If the unit does not return normally, multi-controller board of outdoor unit may be defective
	2. If displayed address or attribute is outdoor unit, Indoor unit detects abnormality when indoor unit transmitted to outdoor unit and there was no reply (ACK).	① Contact failure of transmission wire of outdoor unit or indoor unit ② Disconnection of transmission connector (CN2M) of outdoor unit ③ Defective transmitting receiving circuit of outdoor unit or indoor unit	
	3. If displayed address or attribute is indoor unit, Remote controller detects abnormality when remote controller transmitted to indoor unit and there was no reply (ACK).	① During group operation with indoor unit of multi- refrigerant system, if remote controller transmit to indoor unit while outdoor unit power supply of one refrigerant system is put off or within two minutes of restart, abnormality is detected. ② Contact failure of transmission wire of remote controller or indoor unit ③ Disconnection of transmission connector (CN2M) of indoor unit ④ Defective trnamsitting receiving circuit of indoor unit or remote controller	
	4. If displayed address or attribute is remote controller, Indoor unit detects abnormality when indoor unit transmitted to remote controller and there was no reply (ACK).	① During group operation with indoor unit of multi- refrigerant system, if indoor unit transmit to remote controller while outdoor unit power supply of one refrigerant system is put off or within two minutes of restart, abnormality is detected. ② Contact failure of transmission wire of remote controller or indoor unit ③ Disconnection of transmission connector (CN2M) of indoor unit ④ Defective trnamsitting receiving circuit of indoor unit or remote controller	

Continued to the next page.

From the previous page.

Error Code	Meaning of error code and detection method	Case	Judgment and action
A7 (6607)	5. If displayed address or attribute is FRESH MASTER, Indoor unit detects abnormality when indoor unit transmitted to FRESH MASTER and there was no reply (ACK).	① During sequential operation of indoor unit and FRESH MASTER of other refrigerant system, if indoor unit transmits to FRESH MASTER while outdoor unit power supply of same refrigerant system with FRESH MASTER is put off or within two minutes of restart, abnormality is detected. ② Contact failure of transmission wire of indoor unit or FRESH MASTER ③ Disconnection of transmission connector (CN2M) of indoor unit or FRESH MASTER ④ Defective transmitting receiving circuit of indoor unit or FRESH MASTER	**Same as mentioned in "A7" of the previous page.**
	6. If displayed address or attribute is LOSSNAY, Indoor unit detects abnormality when indoor unit transmitted to LOSSNAY and there was no reply (ACK).	① If the power supply of LOSSNAY is off, indoor unit detects abnormality when it transmits to LOSSNAY. ② During sequential operation of indoor unit and LOSSNAY of other refrigerant system, if indoor unit transmits to LOSSNAY while outdoor unit power supply of same refrigerant system with LOSSNAY is put off or within two minutes of restart, abnormality is detected. ③ Contact failure of transmission wire of indoor unit of LOSSNAY ④ Disconnection of transmission connector (CN2M) of indoor unit ⑤ Defective transmitting receiving circuit of indoor unit or LOSSNAY	
	7. If displayed address or attribute is nonexistent,	① The unit of former address does not exist as address switch has changed while the unit was energized. ② Abnormality is detected when indoor unit transmitted because the address of FRESH MASTER and LOSSNAY are changed after sequential operation of FRESH MASTER and LOSSNAY by remote controller.	
A8 (6608)	**M-NET•NO RESPONSE** Abnormal if a massage was transmitted and there were reply (ACK) that massage was received, but response command does not return. Transmitting side detects abnormality every 30 seconds, six times continuously. Note) The address and attribute displayed at remote controller is indicate the controller that did not reply (ACK).	① Transmitting condition is repeated fault because of noise and the like. ② Extension of transmission wire voltage and signal is caused by over-range transmission wire. • Maximum distance ·····200m • Remote controller line ··(12m) ③ Extension of transmission wire voltage and signal is caused by type-unmatched transmission wire. Type ····· With shield wire- CVVS, CPEVS With normal wire (no shield)- VCTF, VCTFK, CVV CVS, VVR, VVF, VCT Diameter····125mm² or more ④ Accidental malfunction of abnormality-generated controller	① Check transmission waveform or noise on transmission wire. ② Shut off the power supply of outdoor unit and indoor unit and FRESH MASTER or LOSSNAY at the same time for two minutes or more, and put the power on again. If malfunction was accidental, the unit returns to normal. If the same abnormality generates again, controller of displayed address and attribute may be defective.

10-5. TROUBLESHOOTING BY INFERIOR PHENOMENA

Phenomena	Factor	Countermeasure
(1)Remote controller display does not work. (Electric current marker " ◉ " is not displayed on the remote controller.)	Reference (Meaning of the indoor control board LED) LED1 : Micro computer power supply ....Display of DC14V is supply or not from indoor power. LED2 : Power output supplied to remote controller ....Display the power condition supplied to wired remote controller. When the refrigerant address is "0" supplied power output ON. LED3 : Indoor outdoor communication monitor ....Blinking, when receiving the signal normally from the outdoor unit.	

	Indoor control p.c.board LED			Factor	Countermeasure
	LED1	LED2	LED3		
①	off	off	off	①Main power is not turned on. (Power supply inferior) ②Mis-wiring, breaking or contact failure of the connecting line.	①Check the power wiring to the outdoor unit and the breaker. ②Check for incorrect wiring, wiring breaks and poor connections between the indoor and outdoor units.
②	Lighting	off	off (or blinking)	①Refrigerant address excepts "0". ②Mis-wiring, breaking or contact failure of the connecting line.	①Set the refrigerant address to "0" (only 1 refrigerant can be "0" for group control). ②Check for incorrect wiring, wiring breaks and poor connections between the indoor and outdoor units.
③	Lighting	Blinking (or lighting)	–	①Short circuit, miswiring and breaking	①Check for shorts, incorrect wiring and wiring breaks in the remote controller wires. ②Replace the remote controller if the voltage to the remote controller terminal block (TB6) is between 10 and 16V DC.

Phenomena	Factor	Countermeasure
(2)Remaining "PLEASE WAIT" display on the remote controller.	①At longest 2 minutes after the power supply "PLEASE WAIT" is displayed to start up.	Normal operation
	①Communication fault between the remote controller and indoor. ②Communication fault between the indoor and outdoor. ③Outdoor unit protection device is opened. (Abnormal code will be displayed after 2~6 minutes.)	Turn the power supply OFF/ON, and check the following: ①If an error is displayed on the remote controller or outdoor unit's LED within 6 minutes: Refer to the self-diagnosis table on p. 115 to take appropriate action. ②If "H0" display remains for 6 minutes: Failure in indoor control PCB or remote controller
(3)When pressing the remote controller operation switch the OPERATION display is appeared but it will be turned off soon.	①After cancelling to select function from the remote controller, the remote controller operation switch will be not accepted for approx 30 seconds.	Normal operation
(4)Even controlling by the wireless remote controller no beep and not working. (Display is available on the wireless remote controller)	①The pair number settings of the wireless remote controller and indoor control PCB are mismatched. ②Disconnecting of wireless receiving board and contact failure. ③Factor of the above (1).	①Check the pair number settings. ②Check the indoor controller board connector (CN90). Check the wireless receiving board connector (CNB) ③Check the details of above (1).
(5)When operating by the wireless remote controller, beep sound is heard without working.	①No operation for max. 2 minutes after the power supply ON. ②Remote operation is prohibited. •Remote controlling adaptor is connected to the indoor controller board (CN32). •Remote operation is prohibited by centralised controller etc. since it is connected to MELANS. ③Factor of the above (2).	①Normal operation ②Normal operation ③Check the details of above (2).
(6)Upward/downward vane performance fault.	①When the unit is as follows in the HEAT mode, the vane is not downward. (Working of COOL protection function) •During HEAT preparation. •During defrosting. •During compressor stop. ②When setting the downward vane in the cool/dry mode, the vane changes to Horizontal position after 1 hour. ③Vane motor does mot rotate. A) Vane motor fault. B) Disconnecting, breaking and contact fault of the connector. C) Setting to no vane unit. ④Standard position reading fault (Vane motor does not stop). A) Limited switch fault. B) Disconnecting breaking and contact fault of the connector. ※ Only AC timing motor adopting mode. (No limited switch for stepping motor adopting model.)	①Normal operation ②Normal operation ③ A) Vane motor resistance value check. B) Disconnecting, breaking, and contact fault of the connector. Stepping motor adopting model .... CN6V check AC timing motor adopting model .... CNV check C) Check the setting details by selecting the remote controller function. Setting check of the indoor controller board J11~J15 (SW1). ④ A) Limiteds witch (LS) conductance check. B) Check the removing of indoor controller board (CN23), breaking line and contact fault.

Phenomena	Factor	Countermeasure
(7)Left/right louver performance fault.	①Louver motor fault. ②Disconnecting, breaking and contact fault of the connector.	①Louver motor resistance value check ②Check the removing of indoor controller board (CNL) breaking line and contact fault.
(8)Though the remote controller display is normal in cool mode, the capacity is not enough.	①Filter clogging (dirt) ②Heat exchanger clogging (dirt) ③Air duct short cycle. ④Refrigerant shortage. ⑤Operation failure in electronic expansion valve ⑥Thermistor connection failure ⑦Incorrect piping size ⑧Piping is too long.	①Open the grille to check the filter. Clean the filter and remove dust or dirt away. ②Clean the heat exchanger. Lowering the indoor piping temperature and intake pressure means clogging in the heat exchanger. ③Remove screen in the air duct (air outlet/intake). ④Check if gas leaks or not in the piping joint. ⑤,⑥Check the refrigerant circuit operation status. ⑦Check the piping size. ⑧Check the capacity loss characteristic for the piping length.
(9)Though the remote controller display is normal in Heat mode, the capacity is not enough.	①Filter clogging (dirt) ②Heat exchanger clogging (dirt) ③Air duct short cycle. ④Refrigerant shortage. ⑤Outdoor unit bypass circuit failure ⑥Indoor reverse check valve failure Reverse check valve failure may cause refrigerant leakage and restrictor failure. ⑦Heat insulator of refrigerant pipes is defective. ⑧Malfunction of LEV. ⑨Loose connection in thermistor.	①Open the grille to check the filter. Clean the filter and remove dust or dirt away. ②Clean the heat exchanger. Rising the indoor piping temperature and outlet pressure means clogging in the heat exchanger. ③Remove screen in the air duct (air outlet/intake). ④Check if gas leaks or not in the piping joint. ⑤Operating condition check in the refrigerant cycle. ⑥Since outlet temperature and indoor heat exchanger temperature does not rise, measure the outlet pressure and determine the countermeasure. ⑦Check the heat insulator. ⑧,⑨Check the function of refrigerant circuit.

[for wired remote controller]

Before you call out a repair man, check the following table to see whether there is a simple solution to your problem.

Problem	Solution
The room neither gets cool nor warm very much.	Clean the filter. (Dust and rebris that collects in the filter will decrease air-flow.)
	Check the temperature setting and adjust it if necessary.
	Increase the space surrounding the outdoor unit.
	Is the air intake or air outlet blocked?
	Is a window or door open?
The unit does not blow air out right away in the heating mode.	The unit is preparing to deliver warm air.
The unit stops operating before arriving at the set temperature in the heating mode.	Frost forms when the outdoor temperature is low and humidity is high. Wait for about 10 minutes for the frost to melt.
The airflow direction suddenly changes.	After one hour of cooling-mode operation with the airflow in a downward direction, the unit will automatically change to the “Horizontal air-flow” mode. This is to prevent any moisture that may have collected from dripping.
	When the unit is in the heating or defrosting mode, it will automatically change to the “Horizontal air-flow mode”. The vanes will go through a test run before they situate into the specified angle.
Air direction doesn't move (change). (Up/down vane, left/right louver)	1) Check whether the vane has been set to a fixed position (check whether the vane motor connector has been removed). 2) Check whether the unit has a function for switching the air direction. If the unit doesn't have this function, "FUNCTION DOESN'T EXIST" appears when you press the remote control's UP/DOWN VANE or LOUVER button.
When changing the airflow direction, the vanes make at least a complete rotation before stopping in place.	The vanes will go through a test run before they situate into the specified angle
There is a “swishing” noise that occurs from the unit when water flows.	This sound is made when refrigerant inside of the unit is flowing or refilling.
Unit occasionally makes a gurgling sound.	Not an error. This sound is caused by the flow of the refrigerant in the air conditioner being switched.
Unit occasionally thuds.	Not an error. This sound is emitted when the air conditioner (outdoor unit) starts operating.
Outdoor unit occasionally rattles.	Not an error. This sound is caused by the blower air volume control that the outdoor unit performs to maintain the optimum operation status.

Problem	Solution
A ticking noise is heard from inside of the unit.	This sound is made when internal parts of the unit expand or contract when the temperature changes.
An odour is detected in the room.	This is caused when the unit expels odours that have been absorbed from the walls, carpets, furniture or clothing.
A white mist is expelled from the indoor unit.	This may occur just after the unit is turned on when a high level of humidity is present in the room.
Water or moisture is expelled from the outdoor unit.	This occurs to expel water or moisture that may have collected in the pipes or around piping fixtures. This occurs to dispel water from the heat exchanger.
The indicators of the remote controller do not light up when operated.	Turn on the power switch “ ◉“ will be displayed.
CENTRALLY CONTROLLED indicator is displayed in the remote controller.	The start and stop function of the remote controller are not available when the CENTRALLY CONTROLLED indicator is displayed.
The start and stop functions are not available just after restarting the unit.	Wait about three minutes (operation has stopped to prevent damage to the air conditioner).
Fan speed doesn't match set fan speed during DRY operation. (Sometimes no air comes out during DRY operation.)	Not an error. During the DRY operation, blower ON/OFF is controlled by a microprocessor to prevent overcooling and to ensure efficient dehumidification. The fan speed can't be set by the remote controller during DRY operation.
Fan speed doesn't match set fan speed during HEAT operation. (Sometimes no air comes out during HEAT operation.)	Not an error. 1). When the HEAT operation starts, to prevent the unit from emitting cold air, the fan speed is gradually increased from zero to the set speed, in proportion to the temperature rise of the air emitted. 2). When the room temperature reaches the set temperature and the outdoor unit stops, the unit starts the LOW AIR operation. 3). During the HEAT operation, the DEFROST operation is performed to melt the frost adhering to the outdoor unit. During the DEFROST operation, the blower is stopped to prevent cold air coming from the indoor unit.
Air sometimes comes out when operation is stopped after HEAT operation.	Not an error. The blower operates to eliminate the residual heat in the heated air conditioner. It stops after about 1 minute. This operation is performed when operation is stopped with the electric heater ON.

Problem	Solution
The unit started even though the start/stop button was not pushed.	Is this timer on? Press the start/stop button to stop the unit.
	Was a distant commend sent from the remote controller? Find out if the remote controller was used.
	Is the CENTRALLY CONTROLLED indicator displayed? Find out if the remote controller was used.
	Is the automatic (cooling/heating) mode selected? Press the start/ stop button to stop the unit.
The unit stopped even though the start/stop button was not pushed.	Is the timer on? Press the start/stop button to restart the unit.
	Was a distant command sent from the remote controller? Find out if the remote controller was used.
	Is the CENTRALLY CONTROLLED indicator displayed? Find out if the remote controller was used.
The remote controller`s timer cannot be set.	Set the schedule timer if one is connected.
“PLEASE WAIT” is displayed in the remote controller.	An automatic startup test is being performed (will last for about two minutes).
"FILTER" is displayed.	Indicates that it is time to clean the air filter. Clean the air filter. Press the FILTER button on the remote controller twice to make the display disappear. See the instruction manual that came with the product for how to clean the filter.
"STAND BY" is displayed.	Displayed when the unit starts HEAT operation, when the air conditioning function puts the compressor in operation mode, or when the outdoor unit ends DEFROST operation and returns to HEAT operation. The display disappears after about 10 minutes. "STAND BY" displayed on the remote controller indicates that the indoor unit's heat exchanger hasn't fully heated up, so the blower air volume is restricted. To prevent cold air from being felt at this time, the up/down vane is automatically set to horizontal blow. When "STAND BY" is released, the up/down vane returns to the setting specified by the remote controller.

Problem	Solution
"DEFROST" is displayed (no air comes out the unit).	Frost adheres to the outdoor unit when the outside air temperature is low and the humidity is high. This display indicates that the DEFROST operation is being performed to melt this frost. The DEFROST operation ends after about 10 minutes (15 minutes maximum). During the DEFROST operation, the indoor unit's heat exchanger becomes cold, so the blower is stopped. The up/down vane is automatically set to horizontal blow. When the DEFROST operation ends, the unit switches to the HEAT SETUP operation.
An error code is displayed in the remote controller.	A self-diagnostic function is being performed to preserve the air conditioner. * Do not attempt to make repairs yourself. Turn the main switch off and contact the dealer from whom you bought the air conditioner. Provide him or her with the name of the unit and the information displayed in the remote controller.
No display appears on the wireless remote controller. Signals are not received by the thin sensor unless sent from close up.	The batteries are becoming weak. Replace the batteries and press the reset button. * If the display does not appear after replacing the batteries, make sure that the (+,–) cells are aligned correctly.
The operating display of the wireless remote controller`s receiver is flashing.	A self-diagnostic function is being performed to preserve the air conditioner. * Do not attempt to make repairs yourself. Turn the main switch off and contact the dealer from whom you bough the air conditioner. Provide him or her with the name of the unit.

[for wireless remote controller]

Before you call out a repair man, check the following table to see whether there is a simple solution to your problem.

Problem	Display reading	Cause	Solution
Unit does not operate at all.	When POWER ON/OFF button is pushed, there is not beep and nothing is displayed.	Main power switch is turned off.	Turn main power on. Then press the POWER ON/OFF button to turn the unit on.
		Main power fuse has blown.	Replace the fuse.
		Outdoor unit`s ground fault breaker is open.	Replace the ground fault breaker.
		A power cut has occurred (see NOTE below).	Wait until power is restored, then press the POWER ON/OFF button to turn the unit on.
Unit discharges air well, but fails to cool or heat the room well.	Liquid-crystal display indicates that the unit operates.	Improper temperature setting.	After checking the temperature setting.
		Filters are clogged.	Clean the filter and resume operation.
		Outdoor unit`s intake or outlet is obstructed.	Remove the obstruction.
		A door or window has been open.	Shut door or window.
Unit does not start immediately.	Liquid-crystal display indicates that the unit operates.	Unit is waiting three minutes before restarting.	Wait until the unit restarts automatically. The compressor may hesitate resuming because a three-minute resume prevention circuit is incorporated in the outdoor unit for protection of the compressor.

NOTE: After a power cut, the unit will not restart automatically. You will have to restart it by pressing the POWER - ON/OFF button on the remote controller.

If none of the above apply, turn the main switch off and contact the dealer from whom you bough the air-conditioner, telling him the model name and the nature of the problem. Do not try to fix the unit yourself.

In any of the following cases, turn off the main power switch and contact your local dealer for service:

- The operation lamp (on the main unit) flashes.
- The switches do not work properly.
- The circuit breaker trips frequently (or the fuse blows frequently).
- Water has accidentally been splashed into the unit.
- Water leaks from the unit.
- Something is accidentally dropped into the air-conditioner.
- An unusual noise is heard during operation.

The following do not indicate any malfunction:

·Odours :Smells such as tobacco or cosmetic odours may persist after they have been sucked into the unit.

·Sound of liquid flowing inside indoor unit :This can occur during or after operation and is simply the sound of refrigerant being circulated inside the unit.

·Ticking sound coming from indoor unit :This can occur when cooling or heating has just begun or has just stopped. It is caused by the indoor unit shrinking or expanding slightly due to the change in temperature.

·The CENTRALLY CONTROLLED indicator appearing on the LCD panel : From time to time, this message may come up on the LCD panel. This does not indicate any malfunction.

10-6. HOW TO CHECK THE PARTS
PUH-P25, P35, P50, P60, P71, P100VGAA.UK
PUH-P35, P50, P60, P71, P100, P125, P140YGAA.UK
PU-P35, P50, P60, P71, P100VGAA.UK
PU-P35, P50, P60, P71, P100, P125, P140YGAA.UK

<table>
<tr><th>Parts name</th><th>Check points</th></tr>
<tr><td>Liquid temperature thermistor (TH3)
Discharge temperature thermistor (TH4)
Condenser/evaporator temperature thermistor (TH6)</td><td>Disconnect the connector then measure the resistance using a tester. (Surrounding temperature 10℃~30℃)
<table>
<tr><th></th><th>Normal</th><th>Abnormal</th></tr>
<tr><td>TH3</td><td>4.3kΩ~9.6kΩ</td><td rowspan="3">Open or short</td></tr>
<tr><td>TH4</td><td>160kΩ~410kΩ</td></tr>
<tr><td>TH6</td><td>4.3kΩ~9.6kΩ</td></tr>
</table>
(Refer to the next pege for a detail.)</td></tr>
<tr><td>FAN MOTOR(MF)
P25~P71
 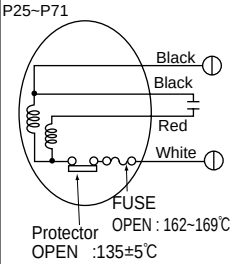

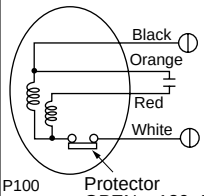

P100
P125
P140
Protector
OPEN :130±5℃
CLOSE :88±15℃</td><td>Measure the resistance between the terminals using a tester.
(Surrounding temperature 20C°)
<table>
<tr><th rowspan="2">Motor lead wire</th><th colspan="2">Normal</th><th rowspan="2">Abnormal</th></tr>
<tr><th>P25~P71</th><th>P100~P140</th></tr>
<tr><td>White — Black</td><td>77.4Ω ±10%</td><td>57.4Ω ±10%</td><td rowspan="2">Open or short</td></tr>
<tr><td>White — Red</td><td>99.1Ω ±10%</td><td>99.7Ω ±10%</td></tr>
</table></td></tr>
<tr><td>Linear expansion valve (LEV)
 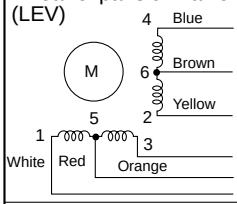
</td><td>Disconnect the connector then measure the resistance using a tester. (Surrounding temperature 20℃)
<table>
<tr><th colspan="4">Normal</th><th>Abnormal</th></tr>
<tr><td>(1) - (5)
White - Red</td><td>(2) - (6)
Yellow - Brown</td><td>(3) - (5)
Orange - Red</td><td>(4) - (6)
Blue - Brown</td><td rowspan="2">Open or short</td></tr>
<tr><td colspan="4">150Ω ±10%</td></tr>
</table></td></tr>
<tr><td>4-WAY VALVE SOLENOID COIL (21S4)</td><td>Measure the resistance between the terminals using a tester.
(Surrounding temperature 20C°)
<table>
<tr><th>Normal</th><th>Abnormal</th></tr>
<tr><td>1430Ω</td><td>Open or short</td></tr>
</table></td></tr>
<tr><td>BYPASS VALVE SOLENOID COIL (21R)

Only PUH-P125, P140</td><td>Measure the resistance between the terminals using a tester.
(Surrounding temperature 20°)
<table>
<tr><th>Normal</th><th>Abnormal</th></tr>
<tr><td>P125, 140</td><td rowspan="2">Open or short</td></tr>
<tr><td>1970Ω</td></tr>
</table></td></tr>
<tr><td>CRANKCASE HEATER (HC)</td><td>Measure the resistance between the terminals using a tester.
<table>
<tr><th colspan="2">Normal</th><th>Abnormal</th></tr>
<tr><td>P25, P35</td><td>P50~P140</td><td rowspan="2">Open or short</td></tr>
<tr><td>1920Ω ±7%</td><td>1516Ω ±7%</td></tr>
</table></td></tr>
</table>

<Thermistor characteristic graph>

Thermistor for lower temperature

Liquid temperature thermistor(TH3)
Condenser/evaporator temperature thermistor(TH6)

Thermistor R_0=15kΩ ± 3%
Fixed number of B=3480 ± 2%

$$Rt=15\exp\{3480(\frac{1}{273+t}-\frac{1}{273})\}$$

0℃	15kΩ
10℃	9.6kΩ
20℃	6.3kΩ
25℃	5.2kΩ
30℃	4.3kΩ
40℃	3.0kΩ

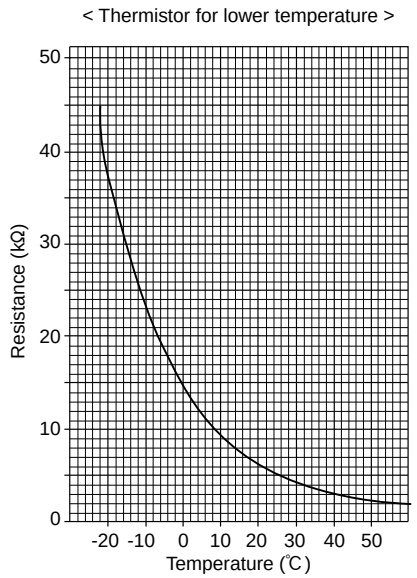

Thermistor for higher temperature

Discharge temperature thermistor(TH4)

Thermistor R120=7.465kΩ ±2%
Fixed number of B=4057 ±2%

$$Rt=7.465\exp\{4057(\frac{1}{273+t}-\frac{1}{393})\}$$

20℃	250kΩ
30℃	160kΩ
40℃	104kΩ
50℃	70kΩ
60℃	48kΩ
70℃	34kΩ
80℃	24kΩ
90℃	17.5kΩ
100℃	13.0kΩ
110℃	9.8kΩ

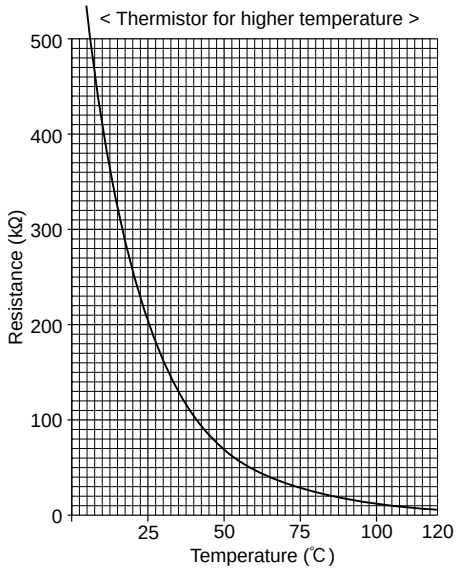

Linear expansion valve

① **Operation summary of the linear expansion valve.**

- Linear expansion valve open/close through stepping motor after receiving the pulse signal from the controller board.
- Valve position can be changed in proportion to the number of pulse signal.

<Connection between the controller board and the linear expansion valve>

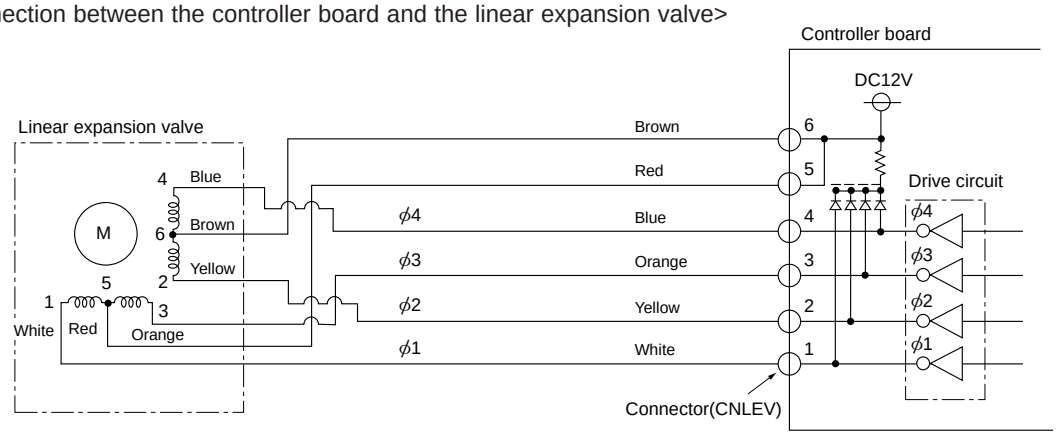

<Output pulse signal and the valve operation>

Output (Phase)	Output			
	1	2	3	4
ϕ1	ON	OFF	OFF	ON
ϕ2	ON	ON	OFF	OFF
ϕ3	OFF	ON	ON	OFF
ϕ4	OFF	OFF	ON	ON

Closing a valve : 1 → 2 → 3 → 4 → 1
Opening a valve : 4 → 3 → 2 → 1 → 4

The output pulse shifts in above order.

❋ 1. When linear expansion valve operation stops, all output phase become OFF.
2. At phase interruption or when phase does not shift in order, motor does not rotate smoothly and motor will locks and vibrates.

② Linear expansion valve operation

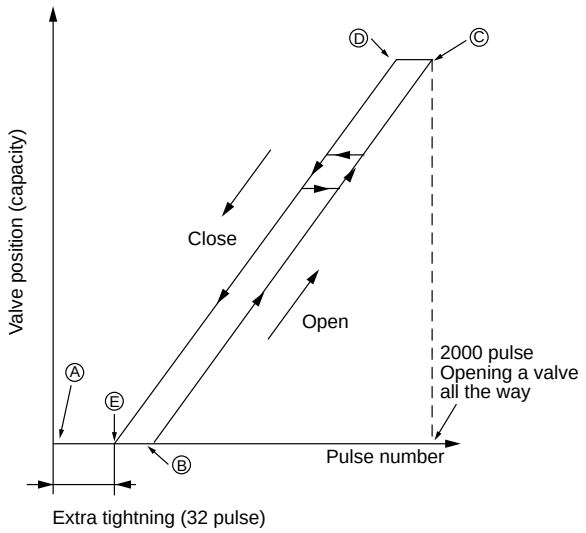

❋ When the switch is turned on, 2200 pulse closing valve signal will be send till it goes to Ⓐ point in order to define the valve position.

When the valve move smoothly, there is no noise or vibration occurring from the linear expansion valve : however, when the pulse number moves from Ⓔ to Ⓐ or when the valve is locked, more noise can be heard than normal situation.

❋ Noise can be detected by placing the ear against the screw driver handle while putting the screw driver to the linear expansion valve.

③ Trouble shooting

Problem	Check point	Corrective measure
Operation circuit failure of the micro processor.	Remove the connector from the controller board and connect diagnostic LEDs. 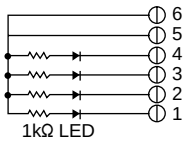 Pulse signal will be sent out for 10 seconds as soon as the main switch is turn on. If there is LED with lights on or lights off, it means the operation circuit is abnormal.	Exchange the indoor controller board at drive circuit failure.
Linear expansion valve mechanism is locked.	Motor will idle and make ticking noise when motor is operated while the linear expansion valve is locked. This ticking sound is the sign of the abnormality.	Exchange the linear expansion vale.
Short or breakage of the motor coil of the linear expansion valve.	Measure the resistance between the each coil (red-white, red-orange, brown-yellow, brown-blue) using a tester. It is normal if the resistance is in the range of 150Ω±10%.	Exchange the linear expansion valve.
Wrong connection of the connector or contact failure.	① Check improperly connected connector terminals and the wire colors. ② Remove the connector on the controller board side and check electrical conductance	Disconnect the connector at the controller board, then check the continuity.

10-7. TEST POINT DIAGRAM

● **Outdoor controller board**

PUH-P25, P35, P50, P60, P71, P100VGAA.UK
PUH-P35, P50, P60, P71, P100, P125, P140YGAA.UK
PU-P35, P50, P60, P71, P100VGAA.UK
PU-P35, P50, P60, P71, P100, P125, P140YGAA.UK

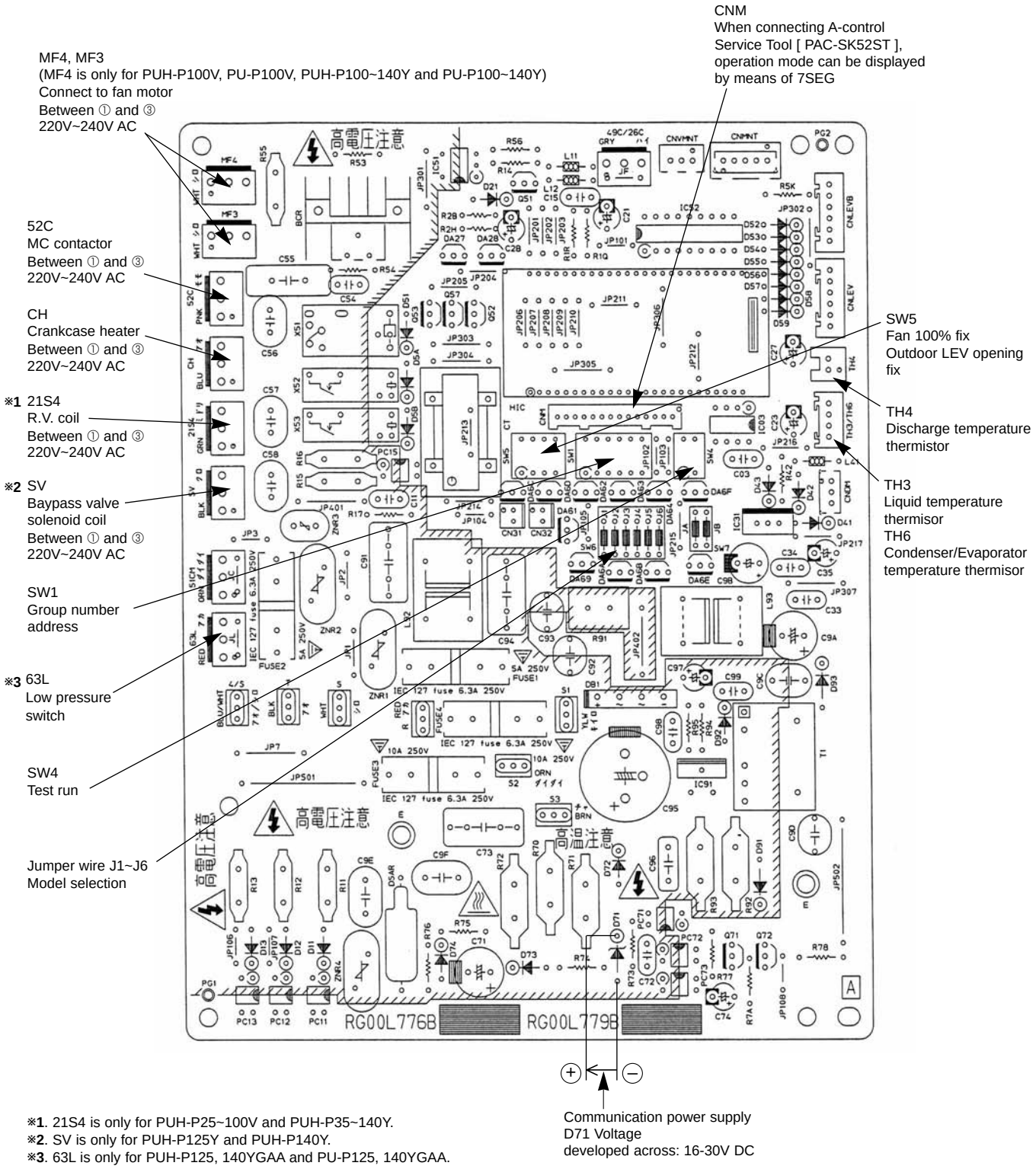

※**1**. 21S4 is only for PUH-P25~100V and PUH-P35~140Y.
※**2**. SV is only for PUH-P125Y and PUH-P140Y.
※**3**. 63L is only for PUH-P125, 140YGAA and PU-P125, 140YGAA.

10-8. EMERGENCY OPERATION

1. When the outdoor unit becomes under mentioned inspection display. Also when the wired remote controller or micro computer in the indoor unit is broken. If there is not any wrong section, short-circuited connector (CN31) in the outdoor controller board is possible to emergency operation.

●Trouble to which emergency operation can be set

Display	Inspections details	
U4	Piping thermistor (TH3) or condenser thermistor (TH6) open/short	
E8	Transmission between indoor and outdoor unit	Receiving trouble (outdoor unit)
E9	Transmission between indoor and outdoor unit	Transmission trouble (outdoor unit)
E0~E7	Transmission trouble except for outdoor unit	

2. Check items and notices as the emergency operation
   (1) Be sure that there is no trouble in the outdoor unit any more besides above mentioned.
   (When there is trouble besides above mentioned, emergency operation is not available.)
   (2) When the emergency operation, their switch (SWE) setting in the indoor controller board is necessary.
   (3) Emergency operation will be serial operation by the power supply ON/OFF.
   ON/OFF or temperature, etc. adjustment is not operated by the remote controller.
   (4) Do not operate for a long time as cold air is blown from the indoor unit, when the outdoor unit starts defrosting operation during heating emergency operation.
   (5) Cool emergency operation must be within 10 hours at most. It may cause heat exchanger frosting in the indoor unit.
   (6) After completing the emergency operation, return the switch setting, etc. in former state.

3. How to operate the emergency operation
   (1) Turn off the main power supply.
   (2) Turn on the emergency switch (SWE) in the indoor controller board.
   (3) Short-circuit the CN31 (emergency operation connector) in the outdoor controller board.
   (4) Set the operation mode (COOL or HEAT) with the SW4-2 in the outdoor controller board.
   (SW4-1 cannot be used.)
   (5) Turn on the main power supply.
   (6) The emergency operation starts and be sure of blinking the operation mode display.

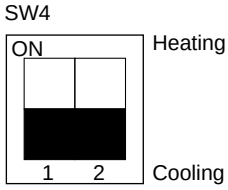

4. Emergency operation details
   (1) Operate with the operation mode which has set (COOL or HEAT) by the SW4-2.
   (2) In the fan operation conditions, the fan is always operated by 100 percent.
   (3) The operation mode display blinks at intervals of 1 second.

5. How to release the emergency operation
   (1) Turn off the main power supply.
   (2) Turn off the emergency switch (SWE) in the indoor controller board.
   (3) Open the CN31 (emergency operation connector) in the outdoor controller board.
   (4) Set the SW4-2 on the outdoor controller board as in the right.

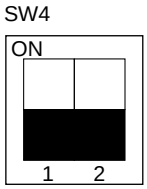

■ Unit operation during emergency operation

Parts name	Operation
Compressor	Always ON
Four way valve	Changeable with SW 4-2
Outdoor fan motor	Max. speed
LEV	Full opening
Indoor fan motor	High

10-9. FUNCTION OF SWITCHS, CONNECTORS AND JUMPERS

● Outdoor switch for a new freon function table

Switch		Function	Action by the switch operation		Effective timing
Signal	No.		ON	OFF	
SW1	1	Compulsory defrosting ※1	Start	Normal	Heat compressor operating
	2	Abnormal history clear	Clear	Normal	off or operating
	3 ~ 6	Refrigerant address setting	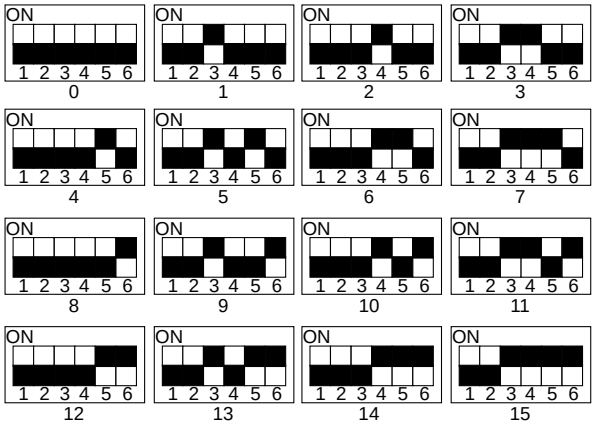		When power supply ON
SW4	1	Trial run ON/OFF	ON	OFF	OFF
	2	Trial run mode setting	Heat	Cool	
SW5	1	Fan 100% fix	100% fix	Normal	off or operating
	2	Outdoor LEV opening fix ※2	Fix	Normal	off or operating
	3	No function	No function	No function	–
	4	No function	No function	No function	–

※1 Compulsory defrosting should be done as follows.
①Change the DIP SW1-1 in the outdoor controller board OFF➔ ON (compulsory defrosting start).
According to the ① operation,
- Heat mode setting
- Compressor operating
- The defrosting starts when the piping temperature is 8˚C and below.
- When the stated condition is satisfied, the defrosting operation will be completed.

※2 Ignore the change of LEV opening, which is subject to change of subcooling, and fix DIP SW 5-2 in the on position. Then LEV opening is fixed. When air conditioner is overloaded for some reasons, ignore the change of subcooling and adjust the LEV opening in accordance with overload condition.

● **Jumper connector function table**

<table>
<tr><th colspan="2">Switch</th><th rowspan="2">Function</th><th colspan="2">Action by the switch operation</th><th rowspan="2">Effective timing</th></tr>
<tr><th>Signal</th><th>No.</th><th>ON</th><th>OFF</th></tr>
<tr><td colspan="2">J1</td><td>Switch of single phase and 3 phase power supply</td><td>3 phase</td><td>Single phase</td><td>When power supply ON</td></tr>
<tr><td colspan="2">J2</td><td>Switch of cooling only/cooling and heat pump</td><td>Cooling only</td><td>Cooling and heat pump</td><td>When power supply ON</td></tr>
<tr><td colspan="2">J3</td><td rowspan="4">Capacity switch</td><td colspan="2" rowspan="4">○:Short ×:Open
<table>
<tr><th rowspan="2">Model</th><th colspan="4">Setting</th></tr>
<tr><th>J3</th><th>J4</th><th>J5</th><th>J6</th></tr>
<tr><td>P25</td><td>×</td><td>×</td><td>×</td><td>×</td></tr>
<tr><td>P35</td><td>×</td><td>○</td><td>×</td><td>×</td></tr>
<tr><td>P50</td><td>○</td><td>○</td><td>×</td><td>×</td></tr>
<tr><td>P60</td><td>×</td><td>×</td><td>○</td><td>×</td></tr>
<tr><td>P71</td><td>×</td><td>○</td><td>○</td><td>×</td></tr>
<tr><td>P100</td><td>○</td><td>×</td><td>×</td><td>○</td></tr>
<tr><td>P125</td><td>○</td><td>○</td><td>×</td><td>○</td></tr>
<tr><td>P140</td><td>×</td><td>×</td><td>○</td><td>○</td></tr>
</table></td><td rowspan="4">When power supply ON</td></tr>
<tr><td>J4</td></tr>
<tr><td>J5</td></tr>
<tr><td>J6</td></tr>
<tr><td colspan="2">CN31</td><td>Emergency operation</td><td>Emergency operation</td><td>Normal</td><td>When power supply ON</td></tr>
</table>

10-10. Optional parts
A-control Service Tool [PAC-SK52ST]

● **Function of switches**

Type of switches	Switch	No.	Function	Action by the switch operation		Effective timing
				ON	OFF	
DIP SW	SW2	1	Changing of LED display <Self-diagnosis>	Operation monitor	Operation monitor	Under operation or suspension
		2				
		3				
		4				
		5				
		6				

Note : Do not use CN33.

● **Outdoor unit operation monitor function**

Operation indicator SW2 : Indicator change of self diagnosis

SW2 setting	Display detail	Explanation for display	Unit
ON 1 2 3 4 5 6			Code indication

<Digital indicator LED1 working details>

・Lighting (Normal operation) : Indicating the operation mode.
(Be sure the 1 to 6 in the SW2 are set to OFF)

SW2

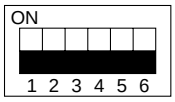

(Initial setting)

(1) Display when the power supply ON.
When the power supply ON, blinking displays by turns.
Wait for 4 minutes at the longest.

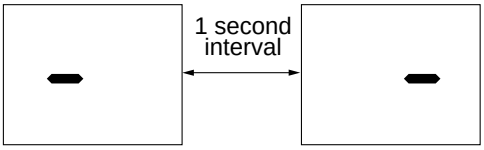

(2) When the display lights. (Normal operation)
①Operation mode display.

LED1

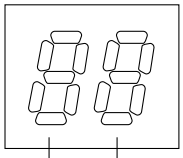

(Lighting)

The tens digit : Operation mode

Display	Operation mode
O	OFF
C	COOL
H	HEAT
d	DEFROSTING

The units digit : Relay output

Display	Compressor	4-way valve	Bypass solenoid valve
0	—	—	—
1	—	—	ON
2	—	ON	—
3	—	ON	ON
4	ON	—	—
5	ON	—	ON
6	ON	ON	—
7	ON	ON	ON

②Error postponing display
(Compressor stop by the protection device working) : Display the postponement code.
Postponement code is display during the error postponing.

(3) When the display blinks (Operation stop by the protection device working) : Display the inspection code.
An error unit number and code are displayed by turns.

<Abnormal unit number> <Abnormal code>

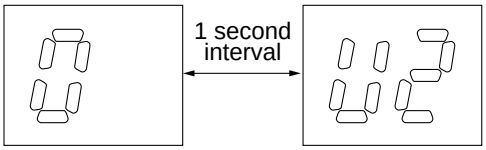

Display	Inspection unit
0	Outdoor unit
1	Indoor unit 1
2	Indoor unit 2
3	Indoor unit 3
4	Indoor unit 4

(4) When 7SEG display lights up (Protective device stops compressor operating.):
The screen displays the corresponding code when abnormality is being recorded.

SW2 setting	Display detail	Explanation for display	Unit
ON 1 2 3 4 5 6	Piping temperature. (TH3) – 40~90	– 40~90 (When the coil thermistor is 0℃ or below, "–" and temperature displays by turns.) (Example) When -10℃ One second interval – □⟷10	℃
ON 1 2 3 4 5 6	Discharge temperature. (TH4) 0~216	0~216 (When the discharge thermistor is 100 or more, the hundreds digit and tens, units digit are displayed by turns.) (Example) When 150℃ One second interval 1□⟷ 50	℃
ON 1 2 3 4 5 6	FAN output step. 0~16	0~16	Step
ON 1 2 3 4 5 6	The number of ON / OFF times. 0~9999	0~9999 (When the number of times is 100 or more, the hundreds digit and tens, units digit are displayed by turns.) (Example) When 42500 times One second interval 4□⟷ 25	100 times
ON 1 2 3 4 5 6	Compressor integrating operation times. 0~9999	0~9999 (When the time is 100 or more, the hundreds digit and tens, units digit are displayed by turns.) (Example) When 2450 hours One second interval 2 □⟷45	10 hours
ON 1 2 3 4 5 6	Compressor operating current. 0~40	0~40	A
ON 1 2 3 4 5 6	LEV opening. 0~440	Output pulse is displayed by one fifth of actual value. (Example) When the display shows 300 300 × 5 = 1500 pulse 1500 pulse is the actual output pulse	Pulse
ON 1 2 3 4 5 6	New error postponement code. New outdoor unit error postponement display.	No postponement code is "00".	Code display
ON 1 2 3 4 5 6	Operation mode on error occurring.	Operation mode on error stop. SW2 setting is displayed at below code. (SW2) ON 1 2 3 4 5 6	Code display

SW2 setting	Display detail	Explanation for display	Unit
ON 1 2 3 4 5 6	Piping temperature (TH3) on error occurring – 40~90	– 40~90 (When the coil thermistor is 0℃ and less, "–" and temperature are displayed by turns) (Example) When –15℃ One second interval – □⟷15	℃
ON 1 2 3 4 5 6	Compressor temperature (TH4) or discharge temperature (TH4) on error occurring. 0~216	0~216 (When the temperature is 100 or more, the hundreds digit and tens, units digit are displayed by turns.) (Example) When 130℃ One second interval 1□⟷ 30	℃
ON 1 2 3 4 5 6	Compressor operating current on error occurring. 0~40	0~40	A
ON 1 2 3 4 5 6	Error code history (1) (latest) Alternate display of abnormal unit number and code.	When no error history, " 0 " and "– –" and displayed by turns.	Code display
ON 1 2 3 4 5 6	Error code history (2) Alternate display of error unit number and code.	When no error history, " 0 " and "– –" and displayed by turns.	Code display
ON 1 2 3 4 5 6	Thermistor ON time . 0~999	0~999 (When the time is 100 or more, the hundreds digit and tens, units digit are displayed by turns.) (Example) When 245 minutes One second interval 2□⟷ 45	Minute
	Trial run elapsed time. 0~120	0~120 (When the time is 100 or more, the hundreds digit and tens, units digit are displayed by turns.) (Example) When 105 minutes One second interval 1□⟷ 05	Minute
ON 1 2 3 4 5 6	The number of connected indoor unit. 0~4	0~4	Unit

<table>
<tr><th>SW2 setting</th><th>Display detail</th><th>Explanation for display</th><th>Unit</th></tr>
<tr><td> 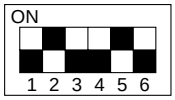
</td><td>Capacity setting display</td><td>Display as an outdoor capacity code
<table>
<tr><th>Capacity</th><th>Code</th></tr>
<tr><td>P25</td><td>6</td></tr>
<tr><td>P35</td><td>9</td></tr>
<tr><td>P50</td><td>10</td></tr>
<tr><td>P60</td><td>11</td></tr>
<tr><td>P71</td><td>14</td></tr>
<tr><td>P100</td><td>20</td></tr>
<tr><td>P125</td><td>25</td></tr>
<tr><td>P140</td><td>28</td></tr>
</table></td><td>Code display</td></tr>
<tr><td> 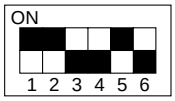
</td><td>Outdoor unit setting advice</td><td>● The tens digit (Total display for applied setting)
<table>
<tr><th>Setting details</th><th>Display details</th></tr>
<tr><td>H·P / Cooling only</td><td>0 : H·P 1 : Cooling only</td></tr>
<tr><td>Single phase / Three phase</td><td>0 : Single phase 2 : Three phase</td></tr>
</table>
● The units digit
<table>
<tr><th>Setting details</th><th>Display details</th></tr>
<tr><td>Defrosting switch</td><td>0 : Normal 1 : High humidity region</td></tr>
</table>
(Example) When switching cooing and heat pump, three phase, defrosting (normal) “20”</td><td>Code display</td></tr>
<tr><td> 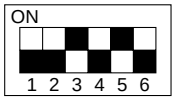
</td><td>Indoor unit piping temperature / LIQUID (TH2)
Indoor 1
– 39~88</td><td>– 39~88
(When the temperature is 0℃ or less, “–” and temperature are displayed by turns.)</td><td>℃</td></tr>
<tr><td> 
</td><td>Indoor unit piping temperature / LIQUID (TH2)
Indoor 2
– 39~88</td><td>– 39~88
(When the temperature is 0℃ or less, “–” and temperature are displayed by turns.)

When no indoor unit, “00” is displayed.</td><td>℃</td></tr>
<tr><td> 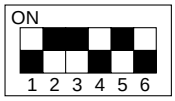
</td><td>Indoor unit piping temperature / LIQUID (TH2)
Indoor 3
– 39~88</td><td>– 39~88
(When the temperature is 0℃ or less, “–” and temperature are displayed by turns.)

When no indoor unit, “00” is displayed.</td><td>℃</td></tr>
<tr><td> 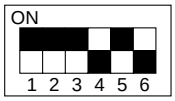
</td><td>Indoor unit piping temperature / LIQUID (TH2)
Indoor 4
– 39~88</td><td>– 39~88
(When the temperature is 0℃ or less, “–” and temperature are displayed by turns)

When no indoor unit, “00” is displayed.</td><td>℃</td></tr>
<tr><td> 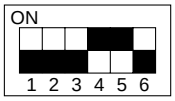
</td><td>Indoor room temperature (TH1)
8~39</td><td>8~39</td><td>℃</td></tr>
</table>

SW2 setting	Display detail	Explanation for display	Unit
ON 1 2 3 4 5 6	Indoor setting temperature 17~30	17~30	℃
ON 1 2 3 4 5 6	Outdoor piping temperature/Cond./Eva. (TH6) – 39~88	– 39~88 (When the temperature is 0℃ or less, "–" and temperature are displayed by turns)	℃
ON 1 2 3 4 5 6	Discharge super heat. SHd 0~255 [Cool = TH4-TH6 Heat = TH4-TH5]	0~255 (When the temperature is 100 or more, the hundreds digit and tens, units digit are displayed by turns.) (Example) 115 ℃ One second interval. 1□⟷15	℃
ON 1 2 3 4 5 6	Sub cool. SC 0~130 [Cool = TH6-TH3 Heat = TH5-TH2]	0~130 (When the temperature is 100 or more, the hundreds digit and tens, units digit are displayed by turns.)	℃
ON 1 2 3 4 5 6	Communication demanded capacity. 0~255 [When air conditioners are connected to M-NET and under central control.] [When no communication demanded setting, "100" is displayed.]	0~255 (When the capacity is 100 or more, the hundreds digit and tens, units digit are displayed by turns) (Example) When 100 One second interval. 1□⟷00	%
ON 1 2 3 4 5 6	Error thermistor display	3: Outdoor liquid piping thermistor (TH3) 6: Outdoor condenser thermistor (TH6) [When no error thermistor, "–" is displayed.]	Code
ON 1 2 3 4 5 6	Fan step on error occurring. 0~16	0~16	Step
ON 1 2 3 4 5 6	LEV opening on error occurring 0~440 Display by scaled 1/5 to actual opening	0~440 (When the pulse is 100 or more, the hundreds digit and tens, units digit are displayed by turns) (Example) When the display shows 300. 300 × 5 = 1500 pulse	Pulse
ON 1 2 3 4 5 6	Outdoor piping temperature/Cond./Eva. on error occurring. (TH6) – 39~88	– 39~88 (When the thermistor is 0℃ and less, "–" and temperature are displayed by turns.) (Example) When –15℃ One second interval –□⟷15	℃
ON 1 2 3 4 5 6	Discharge super heat on error occurring. SHd 0~255 [Cool = TH4-TH6 Heat = TH4-TH5]	0~255 (When the temperature is 100 or more, the hundreds digit and tens, units digit are displayed by turns.) (Example) When 150℃ One second interval 1□⟷50	℃
ON 1 2 3 4 5 6	Sub cool on error occurring. SC 0~130 [Cool = TH6-TH3 Heat = TH5-TH2]	0~130 (When the temperature is 100 or more, the hundreds digit and tens, units digit are displayed by turns.) (Example) When 115℃ One second interval 1□⟷15	℃

SW2 setting	Display detail	Explanation for display	Unit
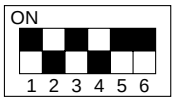	Thermo-on time to error stop. 0~999	0~999 (When the time is 100 or more, the hundreds digit and tens, units digit are displayed by turns.) (Example) When 415 minutes One second interval 4 □⟷15	Minute
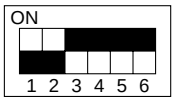	Indoor unit piping temperature / cond. / Eva. (TH5) indoor 1 –39~88	–39~88 (When the temperature is 0°C or less, “–” and temperature are displayed by turns.)	°C
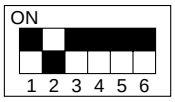	Indoor unit piping temperature / cond. / Eva. (TH5) indoor 2 –39~88	–39~88 (When the temperature is 0°C or less, “–” and temperature are displayed by turns.) When no indoor unit, “00” is displayed.	°C
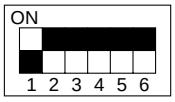	Indoor unit piping temperature / cond. / Eva. (TH5) indoor 3 –39~88	–39~88 (When the temperature is 0°C or less, “–” and temperature are displayed by turns.) When no indoor unit, “00” is displayed.	°C
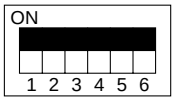	Indoor unit piping temperature / cond. / Eva. (TH5) indoor 4 –39~88	–39~88 (When the temperature is 0°C or less, “–” and temperature are displayed by turns.) When no indoor unit, “00” is displayed.	°C

● **For A-control Service Tool [PAC-SK52ST]**

[Operation for A-control Service Tool]

1. By operating the dip switch SW2 on A-control Service Tool, the digital display of light-emitting diode (LED1) indicates the operation mode and types of inspection with a tow-digit number and symbol.
2. After the inspection, A-control Service Tool shall be removed out of outdoor unit control board.

<Display function of inspection for outdoor unit>

• The blinking patterns of two LEDs—LED1(Green) and LED2(Red)—show the diagnoses of troubles in case of malfunction.
• By 7SEG indicator board indicates the operation mode and inspection types.

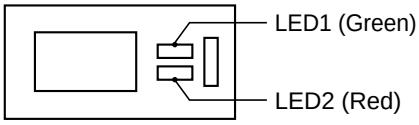

Indication (O.B)		Error Name	Inspection method
LED1 (Green)	LED2 (Red)		
1 blink	1 blink	•Negative Phase detection •The wires of power supply and connecting wires of indoor / outdoor units are crossed with one another.	① Check if the wires of power supply are connected to their corresponding terminals on TB1. ② Check if the wirings are correct on power supply (TB1) and outdoor power supply board (TB2).
	2 blinks	•51CM connector open	① Check if the connectors of 51CM (51C) on outdoor controller board are disconnected. ② Check the continuity of connector 51CM (51C) by using a tester.
		•63L connector open	① Check connection of 63L(63L) connector on outdoor controller board. ② Check the 63L side of connecting wire. ③ Check refrigerant pressure. Charge additional refrigerant. Check continuity by tester. Replace outdoor controller board. ④ Replace outdoor controller board.
2 blinks	1 blink	•Indoor / outdoor unit connector mis-wiring •Excessive numbers of indoor units per an outdoor unit (five or more) •Mis-wiring of indoor / outdoor unit connection wires (crossed wiring or disconnection) •Start-up time is up	① Check if the wirings are correct on the connecting wires of indoor / outdoor units. ② Check if a single outdoor unit connects five or more indoor units.
	2 blinks	•Indoor / outdoor unit transmission error (Signal receiving error: Indoor controller side) •Indoor / outdoor unit transmission error (Transmitting error: Indoor controller side) •Indoor / outdoor unit transmission error (Signal receiving error :Outdoor controller side) •Indoor / outdoor unit transmission error (Transmitting error: Outdoor controller side)	① Check if the wirings are correct on the connecting wires of indoor / outdoor units. ② Check if there is noise on the wires of power supply and connecting wires of indoor / outdoor units. ③ Check if there is noise on both indoor and outdoor controller board. ④ Turn the power off and let the units operate again to confirm.
	3 blinks	•Remote controller transmission error (Signal receiving error: Remote controller side) •Remote controller transmission error (Transmitting error: Remote controller side) •Remote controller transmission error (Signal receiving error: Indoor controller side) •Remote controller transmission error (Transmitting error: Indoor controller side)	① Check if the wirings are correct on indoor units or remote controllers. ② Check if there is noise on the transmission lines of remote controllers. ③ Turn the power off and let the units operate again to confirm.
	4 blinks	•Undefined error code	① Check if there is noise on the transmission lines of remote controllers. ② Check if there is noise on the connecting wires of indoor/outdoor units. ③ Turn the power off and let the units operate again to confirm.

To be continued on the next page.

From the preceding page.

Indication (O.B) LED1 (Green)	Indication (O.B) LED2 (Red)	Error Name	Inspection method
3 blinks	1 blink	•Abnormal high discharge temperature(TH4)	① Check if ball valves are open. ② Check the continuity of connector (TH4) on outdoor controller board by using a tester. ③ Check if the unit fills the refrigerant at the same amount as specified.
	2 blinks	•Abnormal high pressure (High pressure switch 63H worked)	① Check if indoor / outdoor units have a short cycle on their air ducts. ② Check if the connector of 52C (63H) on outdoor controller board is disconnected. ③ Check if the units get their heat exchanger and filter dirty and clogged. ④ Measure resistance values among terminals on linear expansion valve by using a tester.
		•Abnormal low pressure (Low pressure switch 63L worked)	① Check stop valve. ②③④ Put the power off and on again to check if F3 is displayed on restarting. If F3 is displayed, follow the F3 processing direction. ⑤ Correct to proper amount of refrigerant. ⑥ Check linear expansion valve. Refer to 10-6.
	3 blinks	•Protection from overheat operation (TH3)	① Check if outdoor unit has a short cycle on its air duct. ② Check if the connector of TH3 on outdoor controller board is disconnected.
	4 blinks	•Compressor's overcurrent (Overload) •Thermal relay (51C) has been tripped •Overcurrent has locked the operation of compressor in start-up.	① Check if ball valves are open. ② Measure resistance values among terminals on compressor by using a tester. ③ Check if outdoor unit has a short cycle on its air duct. ④ Check if the connector of 51CM (51C) on outdoor controller board is disconnected. ⑤ Check if the units get their heat exchanger and filter dirty and clogged.
	5 blinks	•Open / short circuit of discharge thermistor (TH4) •Open / short circuit of liquid pipe thermistor (TH3) •Open / short circuit of EVA / COND pipe thermistor (TH6)	① Check if the connectors of TH4, TH3, and TH6 on outdoor controller board are disconnected. ② Measure the resistance values of each thermistor (TH4, TH3, and TH6).
4 blinks	1 blinks	•Abnormality of room temperature thermistor (Indoor unit side: TH1) •Abnormality of Liquid pipe thermistor (Indoor unit side:TH2) •Abnormality of EVA / COND pipe thermistor (Indoor unit side: TH5)	① Check if the connectors of CN20, CN21, and CN29 on outdoor controller board are disconnected. ② Measure the resistance values of each thermistor (TH1, TH2, and TH5).
	2 blinks	•Abnormality of drain sensor (Indoor unit side : (DS)) •Malfunction of drain-up machine	① Check if the connector of CN31 on outdoor controller board is disconnected. ② Measure the resistance value of drain sensor. ③ Measure resistance values among terminals on drain-up machine by using a tester.
	3 blinks	•Abnormality of pipe temperature	① Check if the connectors of CN20, CN21, and CN29 on outdoor controller board are disconnected. ② Check if ball valves are open. ③ Check if the wirings are correct on the connecting wires of indoor / outdoor units.

11 FUNCTION SETTING

11-1. UNIT FUNCTION SETTING BY THE REMOTE CONTROLLER

Each function can be set according to necessity using the remote controller. The setting of function for each unit can only be done by the remote controller. Select function available from the table 1.

<Table 1> Function selections

(1) Functions available when setting the unit number to 00 (Select 00 referring to ④ setting the indoor unit number.)

※1 The functions below are available only when the wired remote controller is used.The functions are not available for floor standing models.

Function	Settings	Mode No.	Setting No.	Initial setting (when sent from the factory)	Remarks
Power failure automatic recovery	OFF	01	1	●	The setting is applied to all the units in the same refrigerant system.
	ON		2		
Indoor temperature detecting	Operating indoor units (The average is considered as indoor temperature.)	02	1	●	
	Indoor unit with remote controller		2		
	Remote controller's internal sensor		3		
LOSSNAY connectivity	Not supported	03	1	●	
	Supported (indoor unit not equipped with outdoor air intake)		2		
	Supported (indoor unit equipped with outdoor air intake)		3		
Power supply voltage	240V	04	1		
	220V,230V		2	●	
Frost prevention temperature	2℃ (Normal)	15	1	●	
	3℃		2		
Humidifier control	When the compressor operates, the humidifier also operates.	16	1	●	
	When the fan operates, the humidifier also operates.		2		
Change of defrosting control	Standard	17	1	●	
	For high humidity		2		
Thermo differential setting	Normal	19	1	●	
	5℃		2		
	10℃		3		

(2) Functions available when setting the unit number to 01-03 or AL (07 in case of wireless remote controller)

- When setting functions for an indoor unit in an independent system, set the unit number to 01 referring to ④ setting the indoor unit number.
- When setting functions for a simultaneous- Twin Triple indoor unit system, set the unit number to 01 to 03 for each indoor unit in case of selecting different functions for each unit referring to ④ setting the indoor unit number.
- When setting the same functions for an entire simultaneous Twin Triple-indoor unit system, set refrigerant address to AL (07 in case of wireless remote controller) referring to ④ setting the indoor unit number.

Function	Settings	Mode No.	Setting No.	Initial setting (Factory setting) - : Not available						
				4-Way cassette	Ceiling concealed	Ceiling suspended		Wall mounted	Floor standing	1-Way Casette
				PLA-AA PLH-AAH	PEAD-EA PEHD-EAH PEAD-GA	PCA-GA PCH-GAH	PCA-HA	PKA-GAL PKH-GALH PKA-FAL PKH-FALH	PSA-GA PSH-GAH	PMH-BA
Filter sign	100Hr	07	1				●	●		●
	2500Hr		2	●		●			●	
	No filter sign indicator		3		●					
Air flow (Fan speed)	Quiet / Standard / High ceiling① (PLA, PLH)	08	1	●	-		-	-	-	-
	Standard / High ceiling / High ceiling② (PLA, PLH)		2		-	●	-	-	-	-
			3		-		-	-	-	-
No.of air outlets	4 directions	09	1	●	-	-	-	-	-	-
	3 directions		2		-	-	-	-	-	-
	2 directions		3		-	-	-	-	-	-
Optional high efficiency filter	Not supported	10	1	●	-	●	-	-	-	●
	Supported		2		-		-	-	-	-
Vane setting	No vanes (Vane No.3 setting : PLA, PLH only)	11	1		-		-	-	-	-
	Vane No.1 setting		2		-	●	-	-	-	-
	Vane No.2 setting		3	●	-		-	-	-	-
Energy saving air flow (Heating mode)	Disabled	12	1	●	-	●	-	-	-	●
	Enabled		2		-		-	-	-	
Optional humidifier (PLA-AA only)	Not supported	13	1	●	-	-	-	-	-	-
	Supported		2		-	-	-	-	-	-
Vane differential setting in heating mode (cold wind prevention)	No.1 setting (TH5: 24-28℃)	14	1		-		-		-	
	No.2 setting (Standard, TH5:28-32℃)		2	●	-	●	-	●	-	●
	No.3 setting (TH5: 32-38℃)		3		-		-		-	
Swing	Not available	23	1		-		-		-	
	Available		2	●	-	●	-	●	-	●
Set temperature in heating mode (4 deg up)	Available	24	1	●	●	●	●	●		
	Not available		2						●	
Fan speed when the heating thermostat is OFF	Extra low	25	1	●	●	●	●	●	●	●
	Stop		2							
	Set fan speed		3							
Quiet operation mode of PLA-AA(Fan speed)	Disabled (Standard)	26	1	●	-	-	-	-	-	-
	Enabled (Quiet operation mode)		2		-	-	-	-	-	-
Fan speed when the cooling thermostat is OFF	Set fan speed	27	1	●	●	●	●	●	●	●
	Stop		2							
Detection of abnormality of the pipe temperature (P8)	Available	28	1	●	●	●	●	●	●	●
	Not available		2							

11-1-1. Selecting functions using the wired remote controller

First, try to familiarize yourself with the flow of the function selection procedure. In this section, an example of setting the room temperature detection position is given.
For actual operations, refer to steps ① to ⑩.

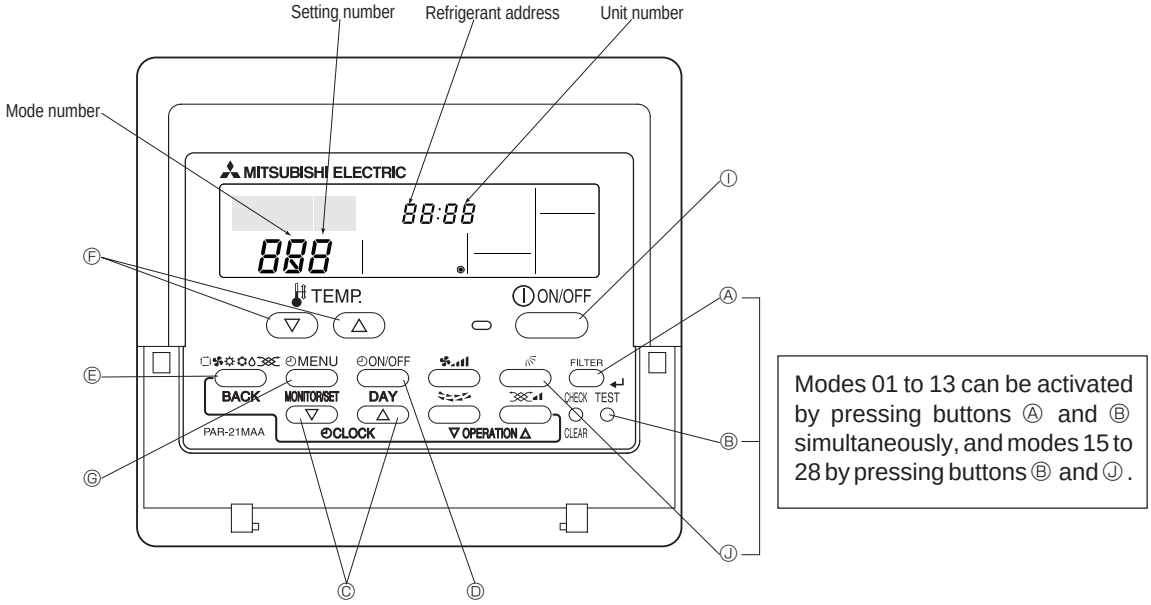

Selecting functions using the wired remote controller

① Check the function selection setting.

② Switch to function setting mode. ※
(Press Ⓐ and Ⓑ at the same time with the remote controller stopped.)

※ For modes 15 and higher, press Ⓙ and Ⓑ at the same time.

③ Specify refrigerant address 00 (outdoor unit)
④ Specify unit No. 00. (indoor unit)
(Use Ⓒ and Ⓓ.)

⑤ Enter the setting.
(Press Ⓔ.)

(Specified indoor unit: BLOW operation)

Change refrigerant address unit No.

YES

NO

⑥ Select mode No. 02
(room temperature detection position).
⑦ Select setting No. 03 (remote controller fixed).
(Use Ⓕ and Ⓖ.)

⑧ Enter the setting.
(Press Ⓔ.)

Example:
Selecting room temperature detection position

⑨

Finished

NO

YES

⑩ Function selection end screen
(Press Ⓐ and Ⓑ at the same time.)

The above procedure must be carried out only if changes are necessary.

[Operating Procedure]

① Check the setting items provided by function selection.
If settings for a mode are changed by function selection, the functions of that mode will be changed accordingly. Check all the current settings according to steps ② to ⑦, fill in the "Check" column in Table 1, and then change them as necessary. For factory settings, refer to the indoor unit's installation manual.

② Switch off the remote controller.
Ⓐ Hold down the (FILTER) and Ⓑ (TEST) buttons simultaneously for at least two seconds. FUNCTION SELECTION will start to flash, and then the remote controller's display content will change as shown below.

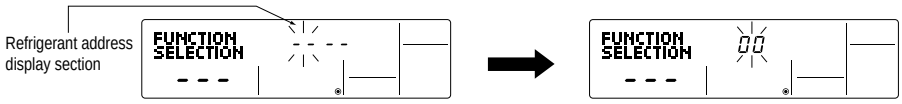

③ Set the outdoor unit's refrigerant address.
Ⓒ Press the [CLOCK] buttons (▽ and △) to select the desired refrigerant address. The refrigerant address changes from "00" to "15". (This operation is not possible for single refrigerant systems.)

* If the unit stops after FUNCTION SELECTION flashed for two seconds or "88" flashes in the room temperature display area for two seconds, a transmission error may have occurred. Check to see if there are any sources of noise or interference near the transmission path.

> Note
> If you have made operational mistakes during this procedure, exit function selection (see step ⑩), and then restart from step ②.

④ Set the indoor unit number.
Ⓓ Press the (ON/OFF) button so that "- -" flashes in the unit number display area.

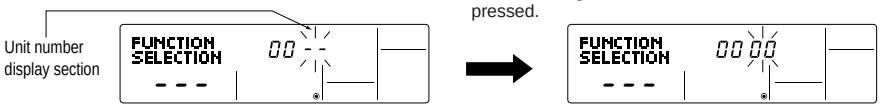

Ⓒ Press the [CLOCK] buttons (▽ and △) to select the unit number of the indoor unit for which you want to perform function selection. The unit number changes to "00", "01", "02","03",04" and "AL" each time a button is pressed.

* To set modes 01 to 06 or 15 to 22 select unit number "00".
* To set modes 07 to 14 or 23 to 28 carry out as follows:
- To set each indoor unit individually, select "01" to "04".
- To set all the indoor units collectively, select "AL".

⑤ Confirm the refrigerant address and unit number.
Ⓔ Press the (MODE) button to confirm the refrigerant address and unit number.
After a while, "- - " will start to flash in the mode number display area.

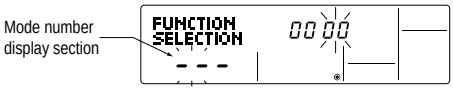

* "88" will flash in the room temperature display area if the selected refrigerant address does not exist in the system.
Furthermore, if "F" appears and flashes in the unit number display area and the refrigerant address display area also flashes, there are no units that correspond to the selected unit number. In this case, the refrigerant address and unit number may be incorrect, so repeat steps ② and ③ to set the correct ones.

Ⓔ When the refrigerant address and unit number are confirmed by pressing the (MODE) button, the corresponding indoor unit will start fan operation. This helps you find the location of the indoor unit for which you want to perform function selection. However, if "00" or "AL" is selected as the unit number, all the indoor units corresponding to the specified refrigerant address will start fan operation.

Example) When the refrigerant address is set to 00 and the unit number is 02.

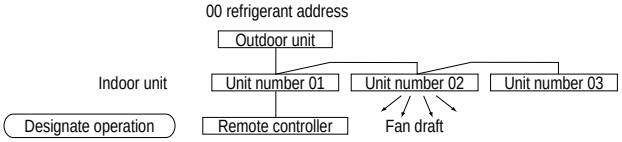

* When grouping different refrigerant systems, if an indoor unit other than the one to which the refrigerant address has been set performs fan operation, there may be another refrigerant address that is the same as the specified one. In this case, check the DIP switch of the outdoor unit to see whether such a refrigerant address exists.

⑥ Select the mode number.
Ⓕ Press the [TEMP] buttons (▽ and △) to set the desired mode number.
(Only the selectable mode numbers can be selected.)

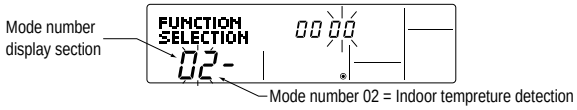

⑦ Select the setting content for the selected mode.
Ⓖ Press the (MENU) button. The currently selected setting number will flash, so check the currently set content.

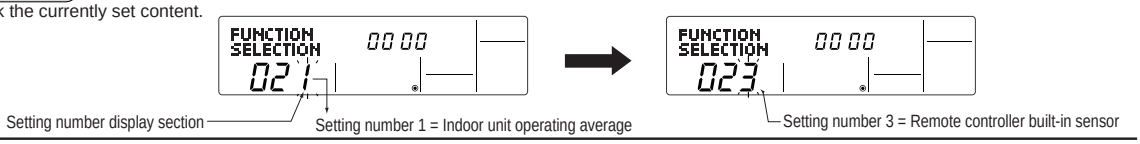

Ⓕ Press the [TEMP] buttons (▽ and △) to select the desired setting number.

⑧ Register the settings you have made in steps ③ to ⑦.
Ⓔ Press the (MODE) button. The mode number and setting number will start to flash and registration starts.

The mode number and setting number will stop flashing and remain lit, indicating the end of registration.

* If " - - - " is displayed for both the mode number and setting number and "88" flashes in the room temperature display area, a transmission error may have occurred. Check to see if there are any sources of noise or interference near the transmission path.

⑨ If you wish to continue to select other functions, repeat steps ③ to ⑧.

⑩ Complete function selection.
Ⓐ Hold down the (FILTER) and (TEST) buttons simultaneously for at least two seconds.
After a while, the function selection screen will disappear and the air conditioner OFF screen will reappear.

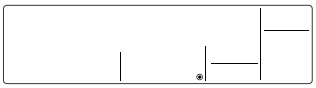

* Do not operate the remote controller for at least 30 seconds after completing function selection. (No operations will be accepted even if they are made.)

> Note
> If a function of an indoor unit is changed by function selection after installation is complete, make sure that a "○" mark, etc., is given in the "Check" column of Table 1 to indicate the change.

11-1-2. Selecting functions using the wireless remote controller (Type C)

Functions can be selected with the wireless remote controller. Function selection using wireless remote controller is available only for refrigerant system with wireless function. Refrigerant address cannot be specified by the wireless remote controller.

[Flow of function selection procedure]

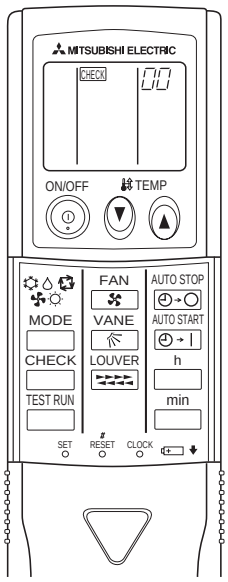

The flow of the function selection procedure is shown below. This example shows how to turn off the function that raises the set temperature by 4 degrees during HEAT operation .
The procedure is given after the flow chart.

① Check the function selection setting.

② Switch to function selection mode.
(Enter address "50" in troubleshooting mode, then press the HOUR button.)

Troubleshooting mode is the mode entered when you press the INSPECT button twice to display "INSPECT".

③ Specify unit No. "01" (since the function applies to unit 01).
(Set address "01" while still in troubleshooting mode, then press the MINUTE button.)
Note: You can't specify the refrigerant address.

⑦ YES — Change unit No. — NO

⑥

④ Select mode No. "24" (function that raises set temperature by 4 degrees during HEAT operation).
(Set address "24" while still in troubleshooting mode, then press the HOUR button.)

⑤ Select setting No. "02" (OFF).
(Set address "02" while still in troubleshooting mode, then press the HOUR button.)

Finished — NO / YES

⑧ End function selection mode.
(End troubleshooting mode.)

Note: When you switch to function selection mode on the wireless remote controller's operation area, the unit ends function selection mode automatically if nothing is input for 10 minutes or longer.

[Operating instructions]

① Check the function settings.

② Press the CHECK button twice continuously. → CHECK is lit and "00" blinks.
Press the temp button once to set "50". Direct the wireless remote controller toward the receiver of the indoor unit and press the h button.

③ Set the unit number.
Press the temp button to set the unit number. (Press "01" to specify the indoor unit whose unit number is 01.)
Direct the wireless remote controller toward the receiver of the indoor unit and press the min button.
(By setting unit number with the min button, specified indoor unit starts performing fan operation.
Detect which unit is assigned to which number using this function. If unit number is set to AL, all the indoor units in same refrigerant system start performing fan operation simultaneously.)

* If a unit number that cannot be recognized by the unit is entered, 3 beeps of 0.4 seconds will be heard. Reenter the unit number setting.
* If the signal was not received by the sensor, you will not hear a beep or a "double beep" may be heard. Reenter the unit number setting.

④ Select a mode.
Press the temp button to set a mode. Press "24" to turn on the function that raises the set temperature by 4 degree during heat operation. Direct the wireless remote controller toward the sensor of the indoor unit and press the h button.
→ The sensor-operation indicator will flash and beeps will be heard to indicate the current setting number.
Current setting number: 1 = 1 beep (one second)
2 = 2 beeps (one second each)
3 = 3 beeps (one second each)

* If a mode number that cannot be recognized by the unit is entered, 3 beeps of 0.4 seconds will be heard. Reenter the mode number.
* If the signal was not received by the sensor, you will not hear a beep or a "double beep" may be heard. Reenter the mode number.

⑤ Select the setting number.
Press the temp button to select the setting number. (02: Not available)
Direct the wireless remote controller toward the receiver of the indoor unit and press the h button.
→ The sensor-operation indicator will flash and beeps will be heard to indicate the the setting number.
Setting number: 1 = 2 beeps (0.4 seconds each)
2 = 2 beeps (0.4 seconds each, repeated twice)
3 = 2 beeps (0.4 seconds each, repeated three times)

* If a setting number that cannot be recognized by the unit is entered, the setting will turn back to the original setting.
* If the signal was not received by the sensor, you will not hear a beep or a "double beep" may be heard. Reenter the setting number.

⑥ Repeat steps ④ and ⑤ to make an additional setting without changing unit number.

⑦ Repeat steps ③ to ⑤ to change unit number and make function settings on it.

⑧ Complete the function settings
Press button.

* Do not use the wireless remote controller for 30 seconds after completing the function setting.

11-2. FUNCTION SELECTION OF REMOTE CONTROLLER

The setting of the following remote controller functions can be changed using the remote controller function selection mode.
Change the setting when needed.

Item 1	Item 2	Item 3 (Setting content)
1.Change Language ("CHANGE LANGUAGE")	Language setting to display	• Display in multiple languages is possible.
2.Function limit ("FUNCTION SELECTION")	(1) Operation function limit setting (operation lock) ("LOCKING FUNCTION")	• Setting the range of operation limit (operation lock)
	(2) Use of automatic mode setting ("SELECT AUTO MODE")	• Setting the use or non-use of "automatic" operation mode
	(3) Temperature range limit setting ("LIMIT TEMP FUNCTION")	• Setting the temperature adjustable range (maximum, minimum)
3.Mode selection ("MODE SELECTION")	(1) Remote controller main/sub setting ("CONTROLLER MAIN/SUB")	• Selecting main or sub remote controller * When two remote controllers are connected to one group, one controller must be set to sub.
	(2) Use of clock setting ("CLOCK")	• Setting the use or non-use of clock function
	(3) Timer function setting ("WEEKLY TIMER")	• Setting the timer type
	(4) Contact number setting for error situation ("CALL.")	• Contact number display in case of error • Setting the telephone number
4.Display change ("DISP MODE SETTING")	(1) Temperature display ℃/°F setting ("TEMP MODE ℃/°F")	• Setting the temperature unit (℃ or °F) to display
	(2) Suction air temperature display setting ("ROOM TEMP DISP SELECT")	• Setting the use or non-use of the display of indoor (suction) air temperature
	(3) Automatic cooling/heating display setting ("AUTO MODE DISP C/H")	• Setting the use or non-use of the display of "Cooling" or "Heating" display during operation with automatic mode

[Function selection flowchart] Refer to next page.
[1] Stop the air conditioner to start remote controller function selection mode. → [2] Select from item1. → [3] Select from item2. → [4] Make the setting. (Details are specified in item3) → [5] Setting completed. → [6] Change the display to the normal one. (End)

[Detailed setting]

[4] -1. CHANGE LANGUAGE setting

The language that appears on the dot display can be selected.

- Press the [◴MENU] button to change the language.

① Japanese (JP), ② English (GB), ③ German (D), ④ Spanish (E),
⑤ Russian (RU), ⑥ Italian (I), ⑦ Chinese (CH), ⑧ French (F)

[4] -2. Function limit

(1) Operation function limit setting (operation lock)

- To switch the setting, press the [◴ON/OFF] button.

① no1 : Operation lock setting is made on all buttons other than the [ⓘON/OFF] button.
② no2 : Operation lock setting is made on all buttons.
③ OFF (Initial setting value) : Operation lock setting is not made

* To make the operation lock setting valid on the normal screen, it is necessary to press buttons (Press and hold down the [FILTER] and [ⓘ ON/OFF] buttons at the same time for two seconds.) on the normal screen after the above setting is made.

(2) Use of automatic mode setting

When the remote controller is connected to the unit that has automatic operation mode, the following settings can be made.

- To switch the setting, press the [◴ON/OFF] button.

① ON (Initial setting value) : The automatic mode is displayed when the operation mode is selected.
② OFF : The automatic mode is not display when the operation mode is selected.

(3) Temperature range limit setting

After this setting is made, the temperature can be changed within the set range.

- To switch the setting, press the [◴ ON/OFF] button.

① LIMIT TEMP COOL MODE :
The temperature range can be changed on cooling/dry mode.
② LIMIT TEMP HEAT MODE :
The temperature range can be changed on heating mode.
③ LIMIT TEMP AUTO MODE :
The temperature range can be changed on automatic mode.
④ OFF (initial setting) : The temperature range limit is not active.

* When the setting, other than OFF, is made, the temperature range limit setting on cooling, heating and automatic mode is made at the same time. However the range cannot be limited when the set temperature range has not changed.

- To increase or decrease the temperature, press the [TEMP (▽) or (△)] button.
- To switch the upper limit setting and the lower limit setting, press the [ ] button. The selected setting will flash and the temperature can be set.
- Settable range
  Cooling/Dry mode : Lower limit: 19 ℃ ~ 30℃ Upper limit: 30 ℃ ~ 19℃
  Heating mode : Lower limit: 17 ℃ ~ 28℃ Upper limit: 28 ℃ ~ 17℃
  Automatic mode : Lower limit: 19 ℃ ~ 28℃ Upper limit: 28 ℃ ~ 19℃

[4] -3. Mode selection setting

(1) Remote controller main/sub setting

- To switch the setting, press the [◴ON/OFF] button.

① Main : The controller will be the main controller.
② Sub : The controller will be the sub controller.

(2) Use of clock setting

- To switch the setting, press the [◴ON/OFF] button.

① ON : The clock function can be used.
② OFF : The clock function cannot be used.

(3) Timer function setting

- To switch the setting, press the [◴ON/OFF] button (Choose one of the followings.).

① WEEKLY TIMER (initial setting on MA deluxe):
The weekly timer can be used.
② AUTO OFF TIMER: The auto off timer can be used.
③ SIMPLE TIMER (Default setting on MA smooth):
The simple timer can be used.
④ TIMER MODE OFF: The timer mode cannot be used.

* When the use of clock setting is OFF, the "WEEKLY TIMER" cannot be used.

(4) Contact number setting for error situation

- To switch the setting, press the [◴ON/OFF] button.

① CALL OFF : The set contact numbers are not displayed in case of error.
② CALL **** *** **** : The set contact numbers are displayed in case of error.
CALL_ : The contact number can be set when the display is as shown on the left.

- Setting the contact numbers

To set the contact numbers, follow the following procedures.
Move the flashing cursor to set numbers. Press the [TEMP. (▽) and (△)] button to move the cursor to the right (left). Press the [◴CLOCK (▽) and (△)] button to set the numbers.

[4] -4. Display change setting

(1) Temperature display ℃/°F setting

- To switch the setting, press the [◴ ON/OFF] button.

①℃ : The temperature unit ℃ is used.
② °F: The temperature unit °F is used.

(2) Suction air temperature display setting

- To switch the setting, press the [◴ON/OFF] button.

① ON : The suction air temperature is displayed.
② OFF : The suction air temperature is not displayed.

(3) Automatic cooling/heating display setting

- To switch the setting, press the [◴ON/OFF] button.

① ON : One of "Automatic cooling" and "Automatic heating" is displayed under the automatic mode is running.
② OFF : Only "Automatic" is displayed under the automatic mode.

Flowchart of Function Setting

Setting language (English)

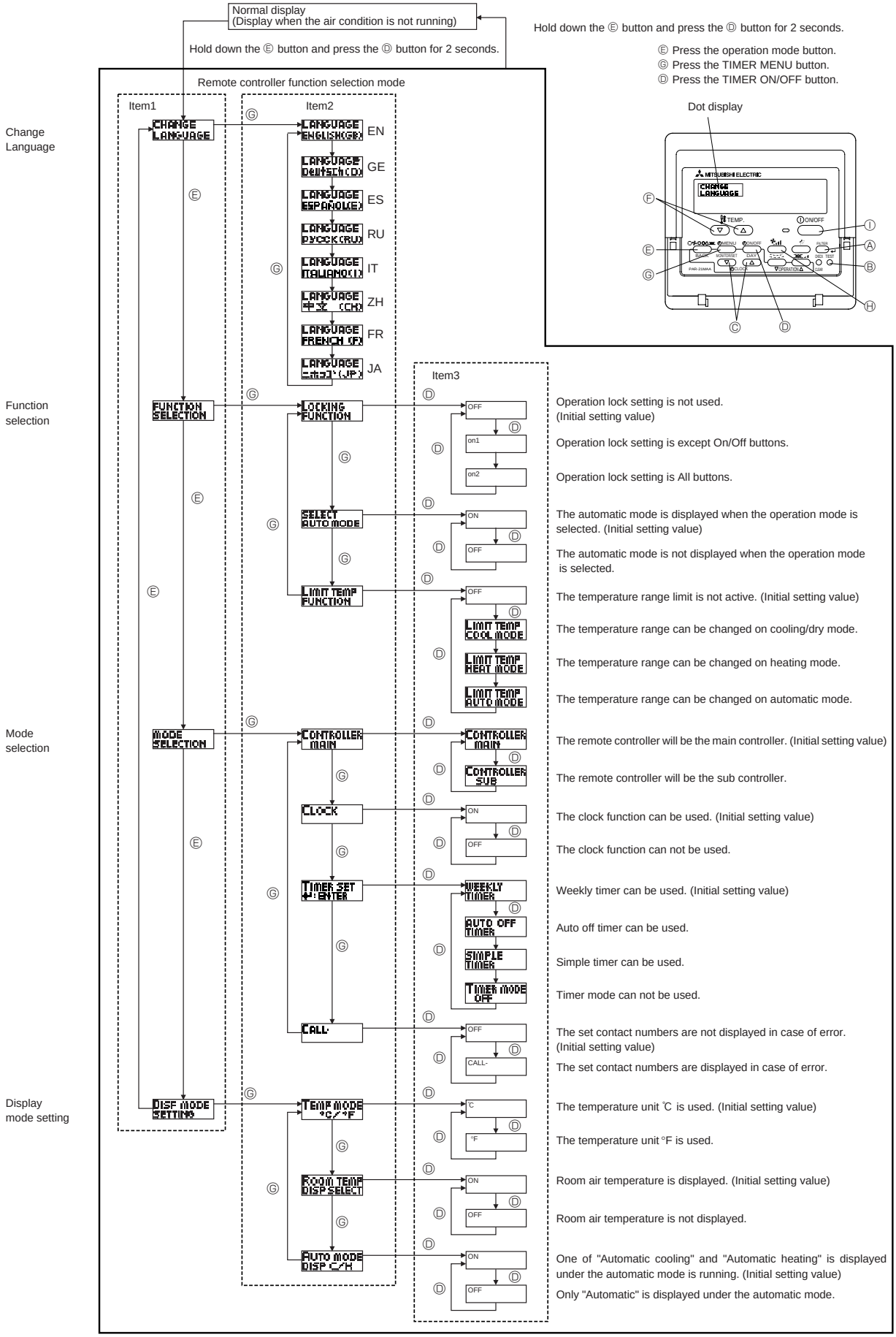

12 DISASSEMBLY PROCEDURE

PUH-P125YGAA.UK PUH-P140YGAA.UK

OPERATING PROCEDURE	PHOTOS
1. Removing the Service panel and Top panel (1) Remove the 3 service panel fixing screws (5 × 15) and slide the hook to remove the service panel. (2) Remove the screws (3 for front, 2 for rear/5 × 15) of the top panel and remove it. <When the rear screws of the top panel are not possible to remove> Remove the 3 front screws (5 × 15) of the top panel and lift the front side of the top panel.	**Photo 1** 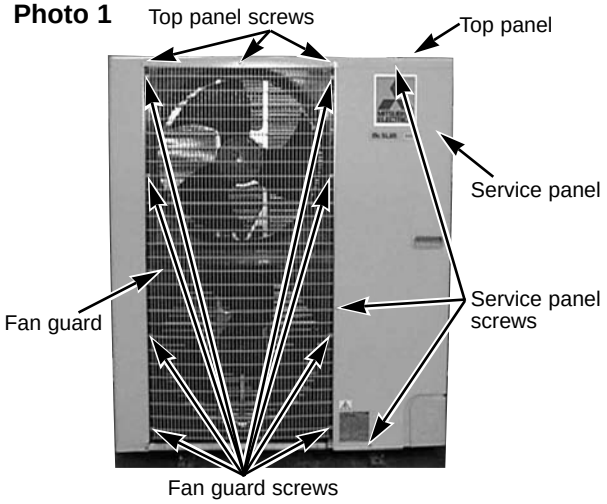
2. Removing the Fan and Fan motor (1) Remove the 6 fan guard screws (5 × 15) to remove it. (See Photo 1) (2) Remove the propeller nut (M8) and propeller fan. (3) Remove the 3 fan motor screws (5 × 16) to remove the fan motor. **Note : PU(H)-P25-71 : Nut (M6)**	**Photo 2** 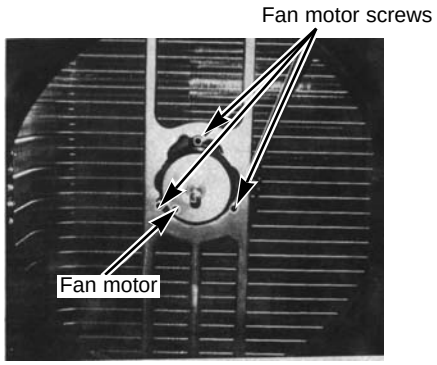
3. Removing the Electrical box (1) Remove the service panel. (See Photo 1) (2) Remove the top panel. (See Photo 1) (3) Remove the Bypass valve, Crankcase heater, Pressure switch<for high pressure>, Liquid temperature thermistor, Discharge temperature thermistor, condenser/evaporator temperature thermistor and 4-way valve from the connector housing on the controller board,then disconnect the fan motor lead wire from the housing mentioned before and the condenser lead wire for the fan from the electrical box. <Diagram symbol in the connector housing> Bypass valve solenoid coil (SV) · Crankcase heater (CH) Pressure switch <for high pressure> (63H) Liquid temperature thermistor (TH3) Discharge temperature thermistor (TH4) Condenser/evaporator temperature thermistor (TH6) 4-way valve solenoid coil (21S4) · Fan motor (MF3, MF4) (4) Remove the terminal cover and disconnect the compressor lead wire and inner thermal device terminal. (5) Remove the electrical box screw (4 × 10) and lift the box to remove it. The electric box cover is hooked at 2 points on the left and 1 point on the right.	**Photo 3** 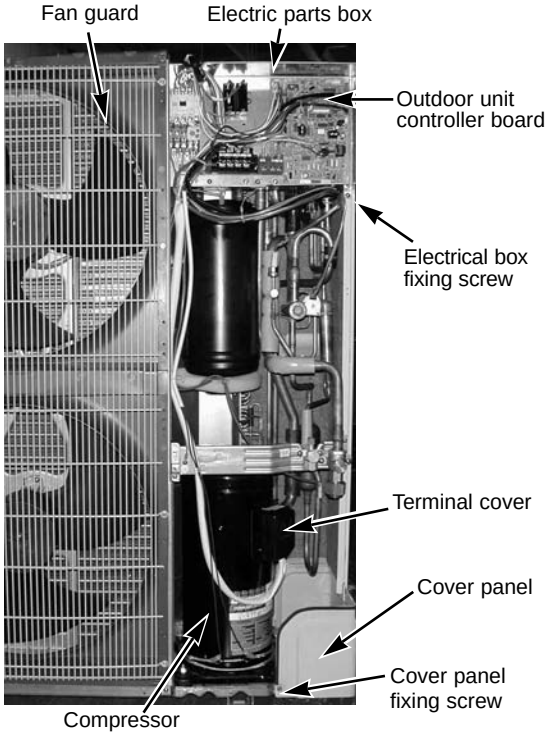

OPERATING PROCEDURE	PHOTOS
4. Removing the liquid temperature thermistor, discharge temperature thermistor and condenser/evaporator temperature thermistor (1) Remove the service panel. (See Photo 1) (2) Remove the top panel. (See Photo 1) (When the top panel removing is not possible, remove the electric parts box. Refer to 3.) ※ When removing liquid temperature thermistor and the discharge temperature thermistor, it unnecessary to remove the top panel. (See Photo 5) (3) Disconnect the lead wire of the liquid temperature thermistor, discharge temperature thermistor and condenser/evaporator temperature thermistor from the housing (TH3, TH4, TH6) on the controller board. (4) Loosen the 1 lead wire clamps on the electrical box. (5) Pull out the thermistor from the sensor holder.	**Photo 4** 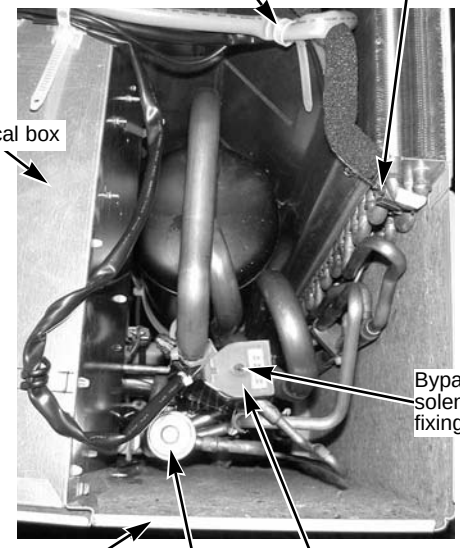
5. Removing the bypass valve solenoid coil (SV) (1) Remove the service panel. (See Photo 1) (2) Remove the top panel. (See Photo 1) (When the top panel removing is not possible, remove the electrical box. Refer to 3.) (3) Remove coil fixing screw (M4 × 8) and disconnect the lead wire of the bypass valve solenoid coil (SV) from on the controller board.	
6. Removing the bypass valve (1) Remove the service panel. (See Photo 1) (2) Remove the top panel. (See Photo 1) (3) Remove the bypass valve solenoid coil. (See Photo 4) (4) Recover gas from the refrigerant circuit. (5) Remove the braze at the intake and outlet of the bypass valve. **Note :** ● Before using a burner, reclaim gas from the pipes until the pressure gauge shows 0 kg/cm^2 (0 MPa). ● Use the burner under the condition that gas can be recovered even when the inner pressure rises by heat. ● When installing the bypass valve, cover it with a wet cloth to prevent it from heating, then braze the pipes.	
7. Removing the 4-way valve solenoid coil (21S4) (1) Remove the service panel. (See Photo 1) (2) Remove 4-way valve solenoid coil fixing screw (M5 × 6) and disconnect the lead wire of the 4-way valve solenoid coil (21S4) from the controller board.	**Photo 5** 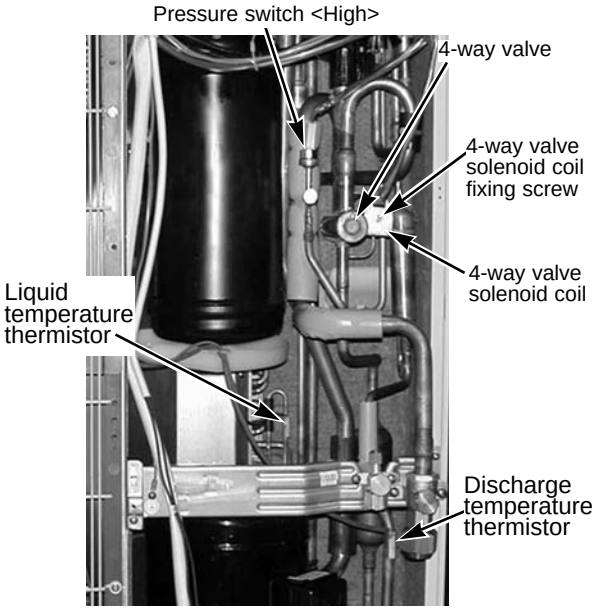
8. Removing the 4-way valve (1) Remove the service panel. (See Photo 1) (2) Remove the 4-way valve solenoid coil. (See Photo 5) (3) Recover gas from the refrigerant circuit. (4) Remove the braze pipe of the 4-way valve. **Note :** ● Before using a burner, reclaim gas from the pipes until the pressure gauge shows 0 kg/cm^2 (0 MPa). ● Use the burner under the condition that gas can be recovered even when the inner pressure rises by heat. ● When installing the 4-way valve, cover it with a wet cloth to prevent it from heating, then braze the pipes.	

OPERATING PROCEDURE	PHOTOS
9. Removing the high pressure switch (1) Remove the service panel. (See Photo 1) (2) Remove the top panel. (See Photo 1) (3) Remove the electrical box. (See Photo 3) (4) Disconnect the lead wire of the pressure switch. (See Photo 6) (5) Remove the braze part of the pressure switch. Note : When installing the pressure switch, cover the pressure switch with a wet cloth to prevent the pressure switch from heating, then braze it.	**Photo 6** 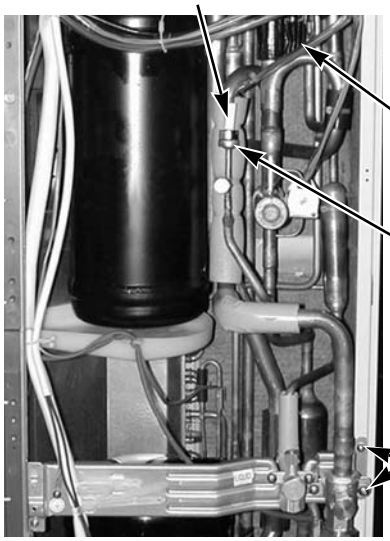
10. Removing the low pressure switch (1) Remove the service panel. (See Photo 1) (2) Remove the top panel. (See Photo 1) (3) Remove the electrical box. (See Photo 3) (4) Disconnect the lead wire of the pressure switch. (See Photo 7) (5) Remove the braze part of the pressure switch. Note : When installing the pressure switch, cover the pressure switch with a wet cloth to prevent the pressure switch from heating, then braze it.	**Photo 7** 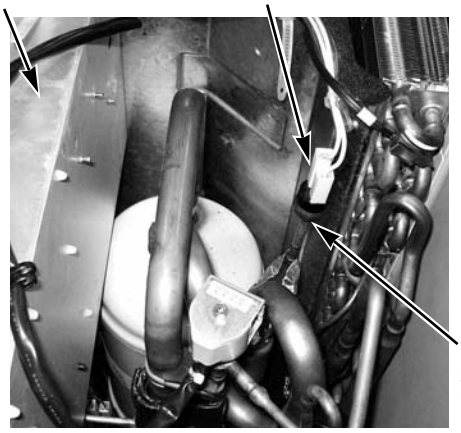
11. Removing the linear expansion valve (1) Remove the service panel. (See Photo 1) (2) Remove the top panel. (See Photo 1) (3) Remove the electrical box. (See Photo 3) (4) Recover gas from the refrigerant circuit. (5) Remove the linear expansion valve coil. (See Photo 8) (6) Remove the braze pipes of the linear expansion valve. **Note 1:** When installing the linear expansion valve, remove its coil and cover the valve with a wet cloth so as to prevent it from heating, then braze the pipes. **Note 2:** By detaching the rear panel, the brazed parts will easily become separated. **Note 3:** ● Before using a burner, reclaim gas from the pipes until the pressure gauge shows 0 kg/cm^2 (0 MPa). ● Use the burner under the condition that gas can be recovered even when the inner pressure rises by heat.	**Photo 8** 

OPERATING PROCEDURE	PHOTOS
12. Removing the Bell mouth (1) Remove the 6 fan guard fixing screws (5 X 15) to remove it. (See Photo 1) (2) Remove the top panel. (3) Remove a bell mouth fixing screw (5 X 15) to remove it.	**Photo 9** 
13. Removing the compressor (1) Remove the service panel. (See Photo 1) (2) Remove the top panel. (See Photo 1) (3) Remove the electric parts box. (See Photo 3) (4) Remove the bell mouth. (See Photo 9) (5) Remove the 3 valve bed fixing screws (4 X 10) and the 4 ball valve fixing screws(5 X 16) to remove the valve bed. (6) Remove the 3 rear panel fixing screws (5 X 15) to the panel. (7) Remove the cover panel fixing screw (5 X 15) to remove the front side of cover panel. (8) Recover gas from the refrigerant circuit. (9) Remove the 3 points of the compressor fixing nut with a monkey wrench. (10) Remove the brazed pipe of compressor intake and outlet to remove the compressor <Reference> ※ When the power supply terminal block of the compressor is fixed with the screws, the tightening torque is from 1.4 to 1.7 N.m. **NOTE** ● Before using a burner, reclaim gas from the pipes until the pressure gauge shows 0 kg/cm^2 (0 MPa). ● Use the burner under the condition that gas can be recovered even when the inner pressure rises by heat.	**Photo 10** 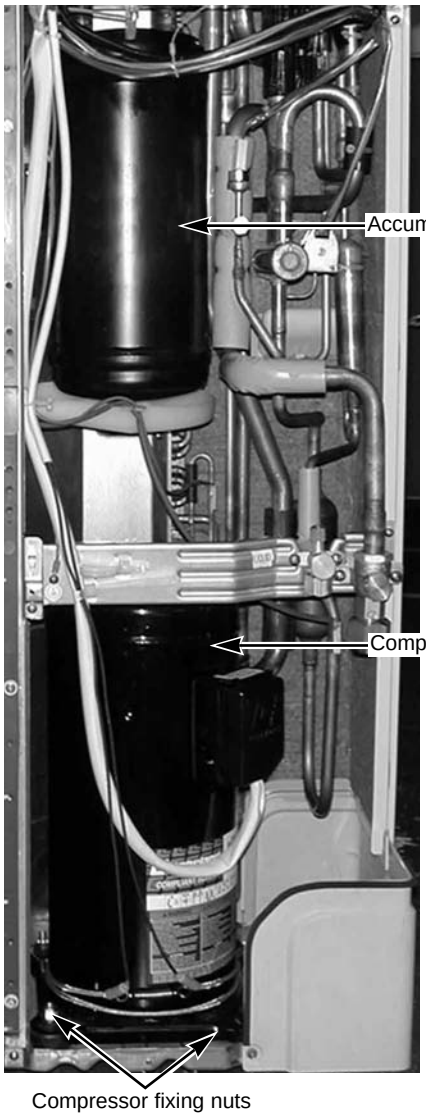
14. Removing the accumulator. (1) Recover gas from the refrigerant circuit. (2) Remove the compressor or remove the rear panel. (3) Remove the brazed pipe of accumulator intake and outlet to remove the accumulator **NOTE :** ● Before using a burner, reclaim gas from the pipes until the pressure gauge shows 0 kg/cm^2 (0 MPa). ● Use the burner under the condition that gas can be recovered even when the inner pressure rises by heat.	

13 PARTS LIST

STRUCTURAL PARTS
PUH-P25VGAA.UK
PUH-P35VGAA.UK
PUH-P35YGAA.UK
PU-P35VGAA.UK
PU-P35YGAA.UK

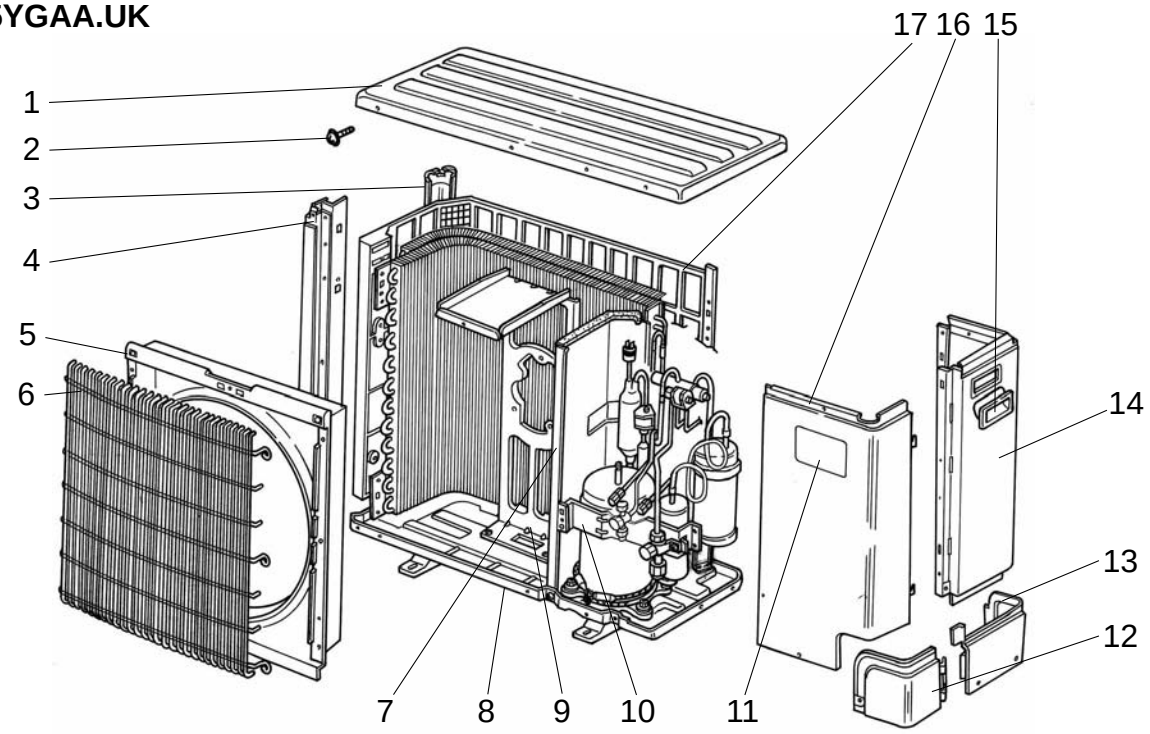

No.	Part No.	Part Name	Specification	Q'ty/set PUH-P• GAA.UK 25.35V	PUH-P• GAA.UK 35Y	PU-P• GAA.UK 35V	PU-P• GAA.UK 35Y	Remarks (Drawing No.)	Wiring Diagram Symbol	Recom-mended Q'ty	Price Unit	Price Amount
1	S70 30L 641	TOP PANEL		1	1	1	1					
2	S71 000 051	F.ST SCREW	(5×15)	16	16	16	16					
3	S70 30L 613	REAR SUPPORT		1	1	1	1					
4	S70 23T 614	FRONT SUPPORT		1	1	1	1					
5	S70 30L 119	BELL MOUTH		1	1	1	1					
6	S70 E01 675	WIRE GRILL - S		1	1	1	1					
7	—	SEPARATOR ASSY		1	1	1	1	(RG00R045G06)				
8	S70 E01 686	BASE		1	1	1	1					
9	S70 K02 130	MOTOR SUPPORT		1	1	1	1					
10	—	VALVE BED ASSY		1	1	1	1	(RG00R048G01)				
11	S70 001 699	LABEL (MITSUBISHI)		1	1	1	1					
12	S70 31L 658	COVER PANEL 1		1	1	1	1					
13	S70 30L 658	COVER PANEL 2		1	1	1	1					
14	S70 E00 682	REAR PANEL		1	1	1	1					
15	S70 30L 655	PANEL HANDLE		1	1	1	1					
16	S70 K01 661	SERVICE PANEL		1								
	S70 K02 661	SERVICE PANEL			1							
	S70 K03 661	SERVICE PANEL				1						
	S70 K02 663	SERVICE PANEL					1					
17	S70 30L 698	REAR GUARD		1	1	1	1					

STRUCTURAL PARTS

PUH-P50VGAA.UK PUH-P60VGAA.UK
PUH-P50YGAA.UK PUH-P60YGAA.UK
PU-P50VGAA.UK PU-P60VGAA.UK
PU-P50YGAA.UK PU-P60YGAA.UK

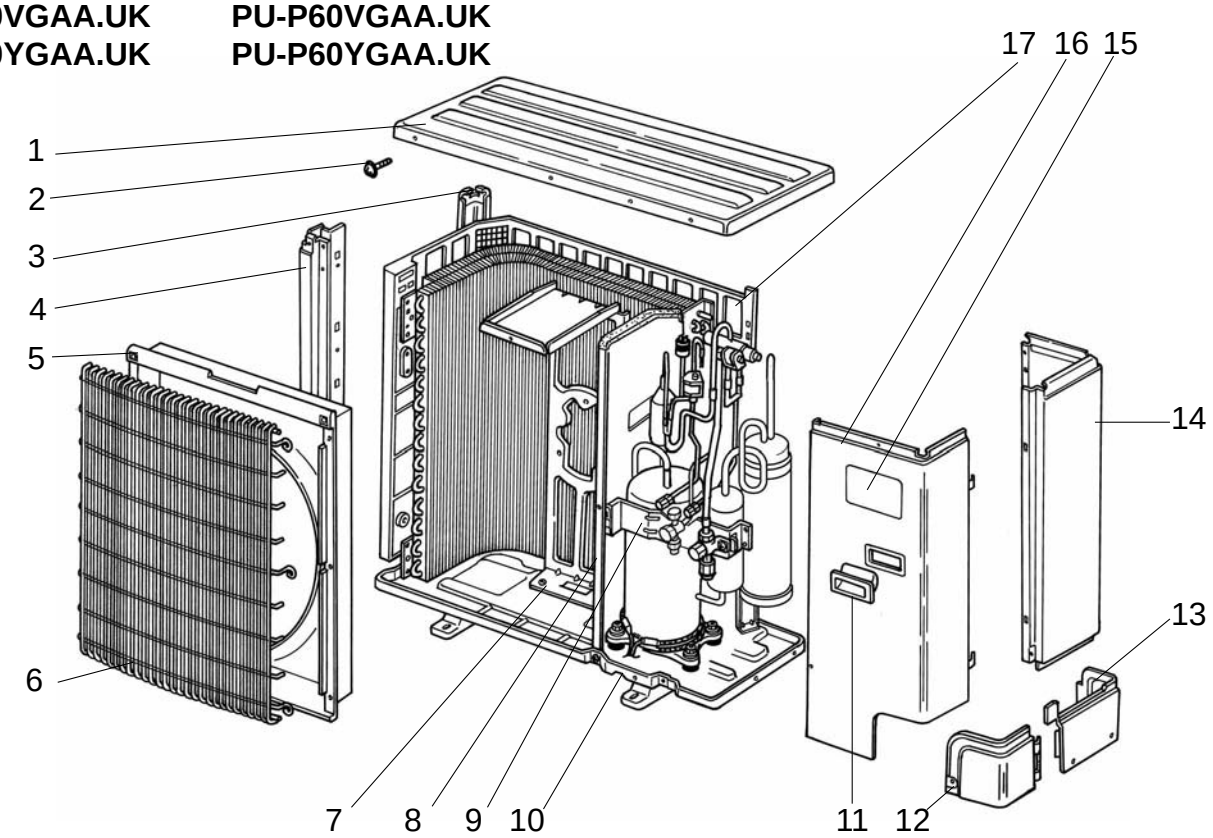

No.	Part No.	Part Name	Specificatio	Q'ty/set PUH-P• GAA.UK 50,60V	PUH-P• GAA.UK 50,60Y	PU-P• GAA.UK 50,60V	PU-P• GAA.UK 50,60Y	Remarks (Drawing No.)	Wiring Diagram Symbol	Recom-mended Q'ty	Price Unit	Price Amount
1	S70 30L 641	TOP PANEL		1	1	1	1					
2	S71 000 051	F.ST SCREW	(5X15)	16	16	16	16					
3	S70 97W 613	REAR SUPPORT		1	1	1	1					
4	S70 E00 614	FRONT SUPPORT		1	1	1	1					
5	S70 36L 119	BELL MOUTH		1	1	1	1					
6	S70 E02 675	WIRE GRILL-M		1	1	1	1					
7	S70 K03 130	MOTOR SUPPORT		1	1	1	1					
8	—	SEPARATOR ASSY		1	1	1	1	(RG00R045G07)				
9	—	VALVE BED ASSY		1	1	1	1	(RG00R048G01)				
10	S70 E02 686	BASE		1	1	1	1					
11	S70 30L 655	PANEL HANDLE		2	2	2	2					
12	S70 31L 658	COVER PANEL-1		1	1	1	1					
13	S70 30L 658	COVER PANEL-2		1	1	1	1					
14	S70 E01 682	REAR PANEL		1	1	1	1					
15	S70 001 699	LABEL (MITSUBISHI)		1	1	1	1					
16	S70 K05 661	SERVICE PANEL		1								
	S70 K06 661	SERVICE PANEL				1						
	S70 K07 661	SERVICE PANEL			1							
	S70 K08 661	SERVICE PANEL					1					
17	S70 31L 698	REAR GUARD		1	1	1	1					

STRUCTURAL PARTS
PUH-P71VGAA.UK
PUH-P71YGAA.UK
PU-P71VGAA.UK
PU-P71YGAA.UK

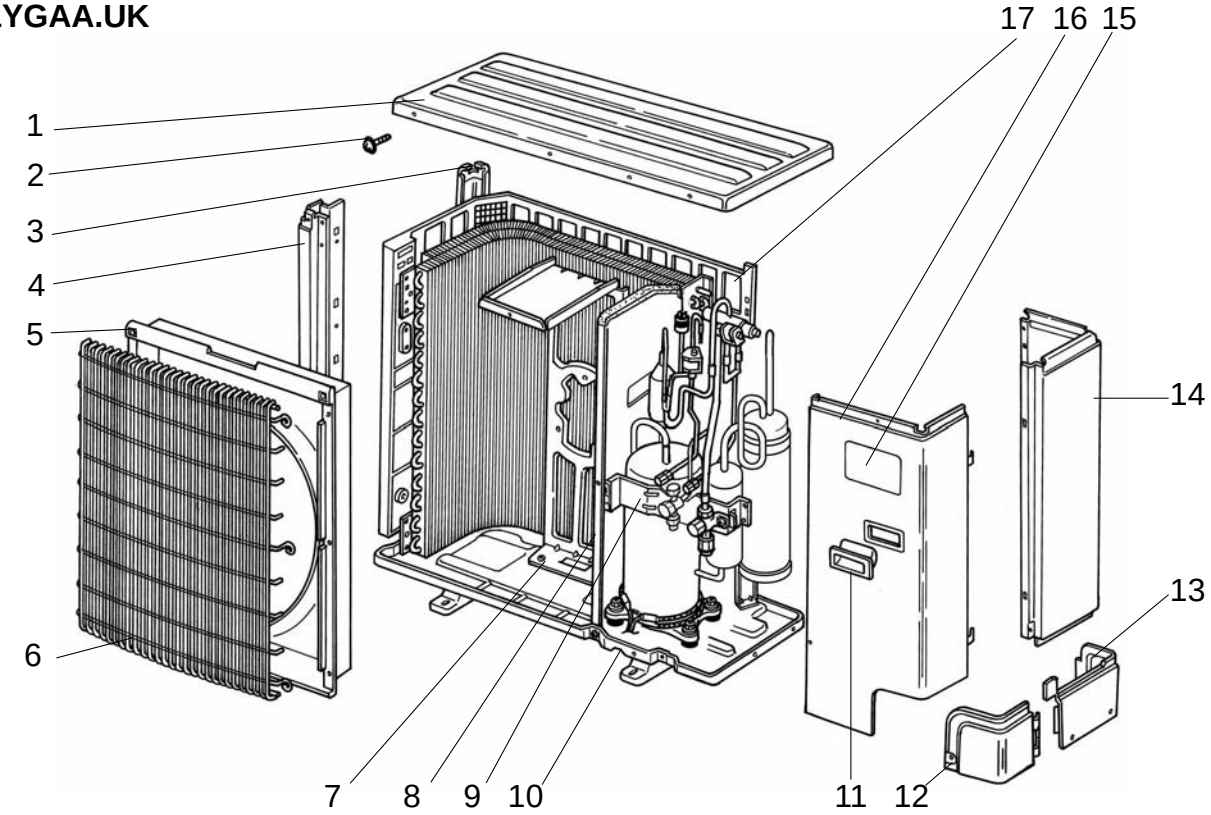

No.	Part No.	Part Name	Specificatio	Q'ty/set PUH-P71 .UK VGAA	Q'ty/set PUH-P71 .UK YGAA	Q'ty/set PU-P71 .UK VGAA	Q'ty/set PU-P71 .UK YGAA	Remarks (Drawing No.)	Wiring Diagram Symbol	Recom-mended Q'ty	Price Unit	Price Amount
1	S70 30L 641	TOP PANEL		1	1	1	1					
2	S71 000 051	F.ST SCREW	(5X15)	16	16	16	16					
3	S70 97W 613	REAR SUPPORT		1	1	1	1					
4	S70 E00 614	FRONT SUPPORT		1	1	1	1					
5	S70 36L 119	BELL MOUTH		1	1	1	1					
6	S70 E02 675	WIRE GRILL-M		1	1	1	1					
7	S70 K03 130	MOTOR SUPPORT		1	1	1	1					
8	—	SEPARATOR ASSY		1	1	1	1	(RG00R045G08)				
9	—	VALVE BED ASSY		1	1	1	1	(RG00R048G01)				
10	S70 E02 686	BASE		1	1	1	1					
11	S70 30L 655	PANEL HANDLE		2	2	2	2					
12	S70 31L 658	COVER PANEL-1		1	1	1	1					
13	S70 30L 658	COVER PANEL-2		1	1	1	1					
14	S70 E02 682	REAR PANEL		1	1	1	1					
15	S70 001 699	LABEL (MITSUBISHI)		1	1	1	1					
16	S70 K05 661	SERVICE PANEL		1								
	S70 K06 661	SERVICE PANEL				1						
	S70 K07 661	SERVICE PANEL			1							
	S70 K08 661	SERVICE PANEL					1					
17	S70 31L 698	REAR GUARD		1	1	1	1					

STRUCTURAL PARTS
PUH-P100VGAA.UK PU-P100VGAA.UK
PUH-P100YGAA.UK PU-P100YGAA.UK

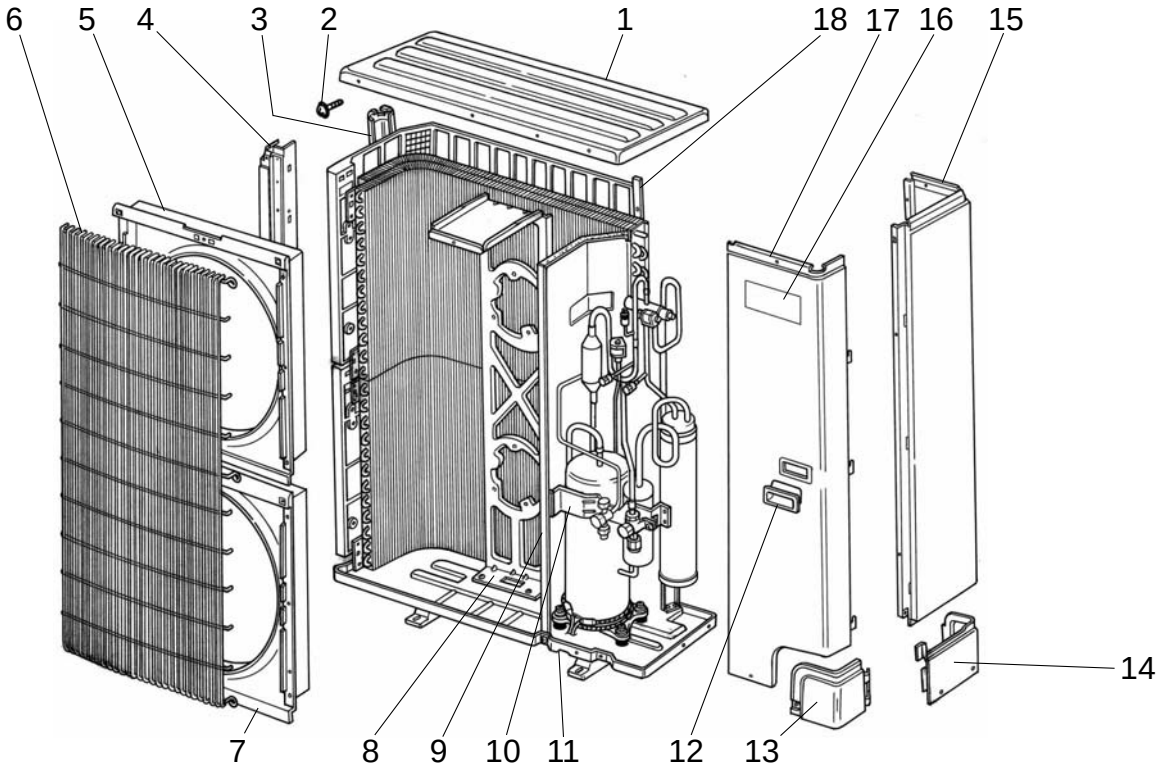

No.	Part No.	Part Name	Specification	Q'ty/set PUH-P100 .UK VGAA	Q'ty/set PUH-P100 .UK YGAA	Q'ty/set PU-P100 .UK VGAA	Q'ty/set PU-P100 .UK YGAA	Remarks (Drawing No.)	Wiring Diagram Symbol	Recom-mended Q'ty	Price Unit	Price Amount
1	S70 30L 641	TOP PANEL		1	1	1	1					
2	S71 000 051	F.ST SCREW	(5×15)	18	18	18	18					
3	S70 98W 613	REAR SUPPORT		1	1	1	1					
4	S70 E01 614	FRONT SUPPORT		1	1	1	1					
5	S70 41L 119	BELL MOUTH		1	1	1	1					
6	S70 E03 675	WIRE GRILL - L		1	1	1	1					
7	S70 30L 119	BELL MOUTH		1	1	1	1					
8	S70 42L 130	MOTOR SUPPORT		1	1	1	1					
9	—	SEPARATOR ASSY		1	1	1	1	(RG00R045G09)				
10	—	VALVE BED ASSY		1	1	1	1	(RG00R048G01)				
11	S70 E03 686	BASE		1	1	1	1					
12	S70 30L 655	PANEL HANDLE		2	2	2	2					
13	S70 31L 658	COVER PANEL-1		1	1	1	1					
14	S70 30L 658	COVER PANEL-2		1	1	1	1					
15	S70 E03 682	REAR PANEL		1	1	1	1					
16	S70 001 699	LABEL (MITSUBISHI)		1	1	1	1					
17	S70 K09 661	SERVICE PANEL		1								
	S70 K10 661	SERVICE PANEL			1							
	S70 K11 661	SERVICE PANEL				1						
	S70 K12 661	SERVICE PANEL					1					
18	S70 30L 698	REAR GUARD		2	2	2	2					

STRUCTURAL PARTS
PUH-P125YGAA.UK
PUH-P140YGAA.UK
PU-P125YGAA.UK
PU-P140YGAA.UK

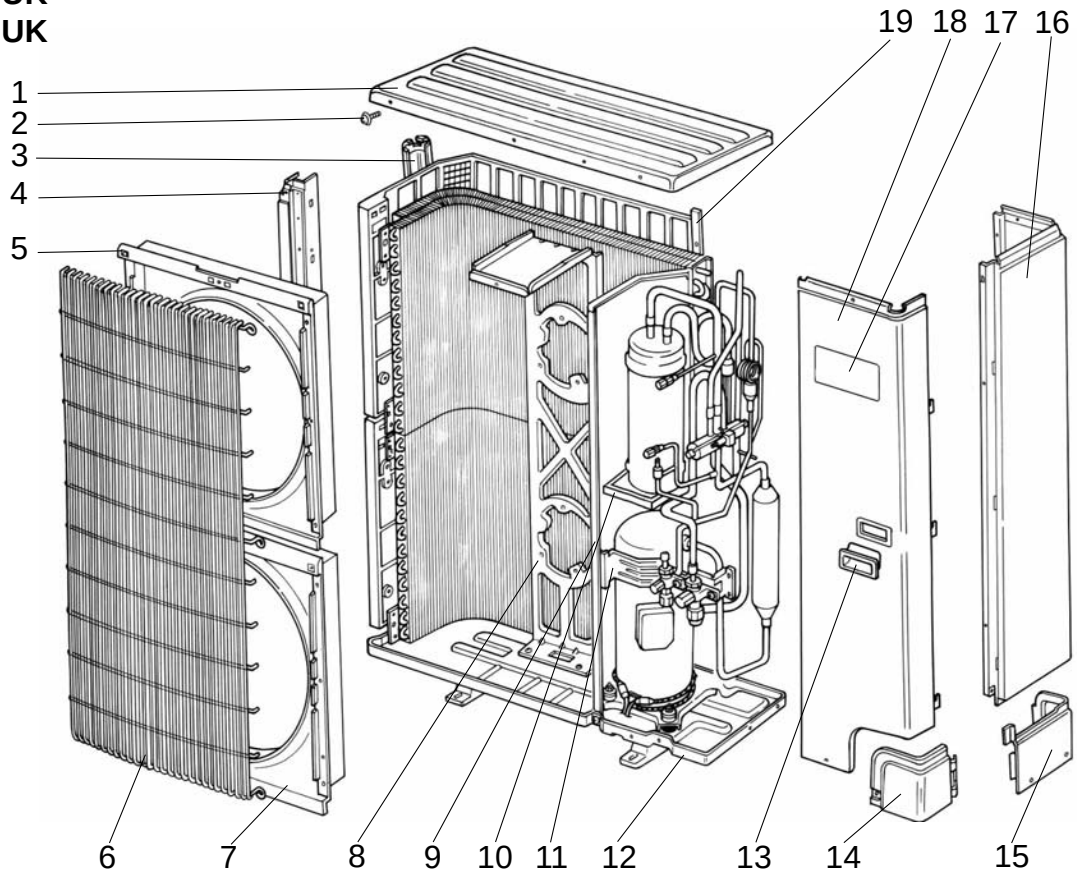

No.	Part No.	Part Name	Specification	Q'ty/set PUH-P125, 140 YGAA.UK	Q'ty/set PU-P125, 140 YGAA.UK	Remarks (Drawing No.)	Wiring Diagram Symbol	Recom-mended Q'ty	Price Unit	Price Amount
1	S70 17T 641	TOP PANEL		1	1					
2	S71 000 051	F.ST SCREW	(5×15)	18	18					
3	S70 98W 613	REAR SUPPORT		1	1					
4	S70 17T 614	FRONT SUPPORT		1	1					
5	S70 41L 119	BELL MOUTH		1	1					
6	S70 E03 675	WIRE GRILL - L		1	1					
7	S70 30L 119	BELL MOUTH		1	1					
8	S70 42L 130	MOTOR SUPPORT		1	1					
9	—	SEPARATOR ASSY		1	1	(RG00R046G03)				
10	S70 A04 529	ACCUMULATOR DRAIN PAN		1	1					
11	—	VALVE BED ASSY		1	1	(RG00R048G03)				
12	S70 H13 686	BASE		1	1					
13	S70 30L 655	PANEL HANDLE		2	2					
14	S70 31L 658	COVER PANEL-1		1	1					
15	S70 30L 658	COVER PANEL-2		1	1					
16	S70 E04 682	REAR PANEL		1	1					
17	S70 001 699	LABEL(MITSUBISHI)		1	1					
18	S70 K13 661	SERVICE PANEL		1						
	S70 K14 661	SERVICE PANEL			1					
19	S70 17T 698	REAR GUARD		2	2					

FUNCTIONAL PARTS
PUH-P25VGAA.UK
PUH-P35VGAA.UK
PU-P35VGAA.UK

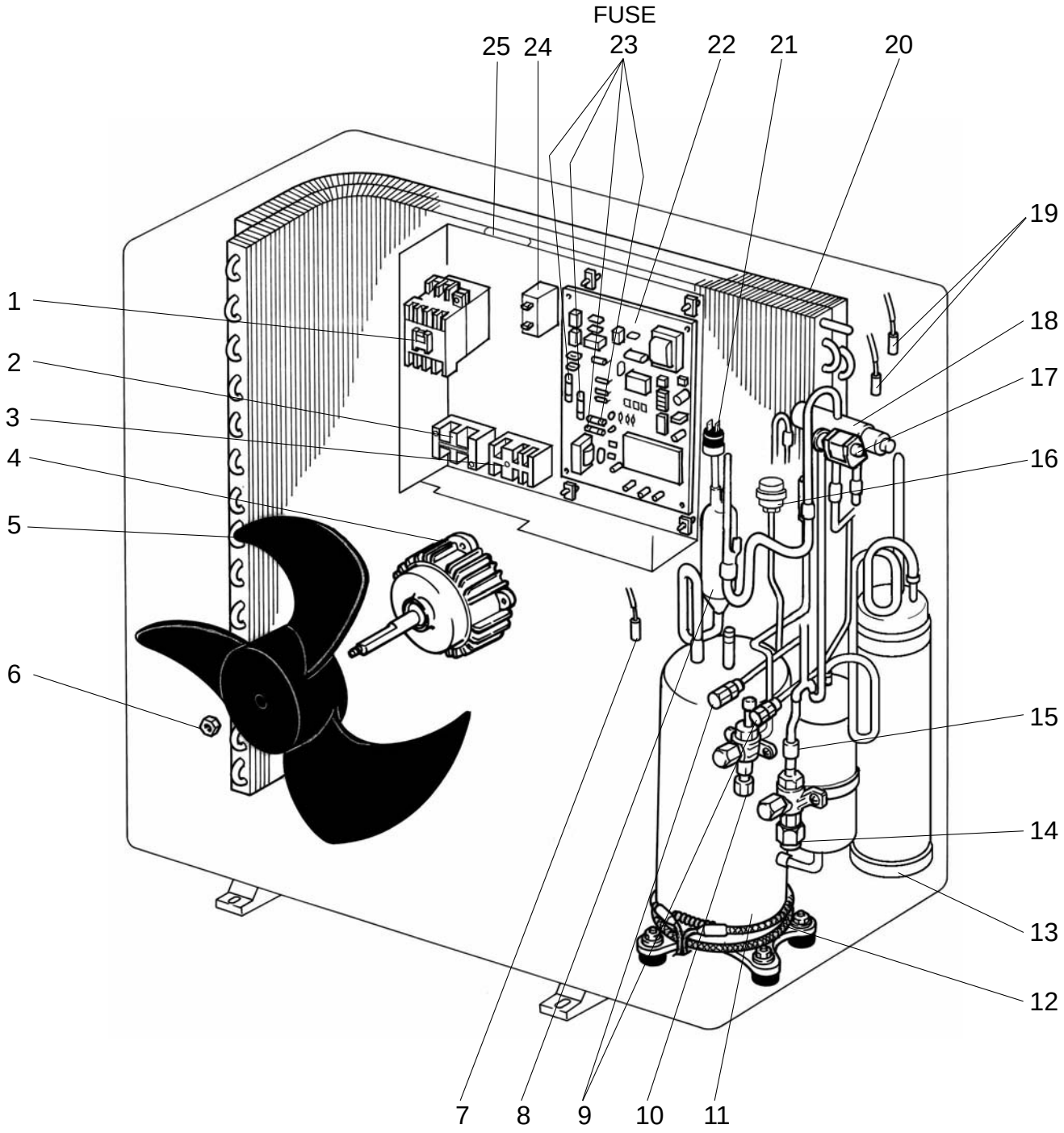

No.	Part No.	Part Name	Specification	Q'ty/set			Remarks	Wiring Diagram Symbol	Recom-mended Q'ty	Price	
				PUH-P		PU-P				Unit	Amount
				25VGAA .UK	35VGAA .UK	35VGAA .UK					
1	S70 249 708	CONTACTOR	S-U12 240V	1	1	1		52C			
2	S70 E03 716	TERMINAL BLOCK	2P(L,N)	1	1	1		TB1			
3	S70 E04 716	TERMINAL BLOCK	3P(S1,S2,S3)	1	1	1		TB2			
4	S70 K05 763	OUTDOOR FAN MOTOR	YDK75-6U	1	1	1		MF			
5	S70 K04 115	PROPELLER FAN 4		1	1	1					
6	S70 K01 097	NUT	M6	1	1	1					
7	S70 E16 202	THERMISTOR (DISCHARGE)		1	1	1		TH4			
8	S70 E00 467	MUFFLER		1	1						
9	S70 E00 413	CHARGE PLUG		2	2	2					
10	S70 400 418	STOP VALVE(LIQUID)	1/4″	1							
	S70 200 418	STOP VALVE(LIQUID)	3/8″		1	1					
11	S70 061 400	COMPRESSOR	RE189VHSMT	1				MC			
	S70 062 400	COMPRESSOR	RE277VHSMT		1	1		MC			
12	S70 E02 236	CRANKCASE HEATER	240V / 30W	1	1	1		CH			
13	S70 E02 440	ACCUMULATOR		1	1	1					
14	S70 E01 411	BALL VALVE	1/2″	1							
	S70 E03 411	BALL VALVE	5/8″		1	1					
15	S70 66L 450	STRAINER	#50-12	1	1	1					
16	S70 E03 401	LINEAR EXPANSION VALVE		1	1	1		LEV			
17	S70 350 242	4-WAY VALVE SOLENOID COIL		1	1			21S4			
18	S70 E01 403	4-WAY VALVE (REVERSING)		1	1						
19	S70 E15 202	THERMISTOR (LIQUID , CONDENSER / EVAPORATOR)		1	1	1		TH3, TH6			
20	S70 E99 408	HEAT EXCHANGER		1							
	S70 E00 408	HEAT EXCHANGER			1	1					
21	S70 E00 208	HIGH PRESSURE SWITCH	OFF:3.3MPa ON:2.6MPa	1	1	1		63H			
22	S70 31L 315	OUTDOOR CONTROLLER BOARD		1	1	1		O.B			
23	S70 520 239	FUSE	6.3A	4	4	4	(PART OF BOARD)	FUSE			
24	S70 30L 255	OUTDOOR FAN CAPACITOR	2.2μF 440V	1	1	1		C3			
25	S70 E00 723	COMPRESSOR CAPACITOR	30μF 420V	1				C5			
	S70 E01 723	COMPRESSOR CAPACITOR	40μF 400V		1	1		C5			

FUNCTIONAL PARTS
PUH-P35YGAA.UK
PU-P35YGAA.UK

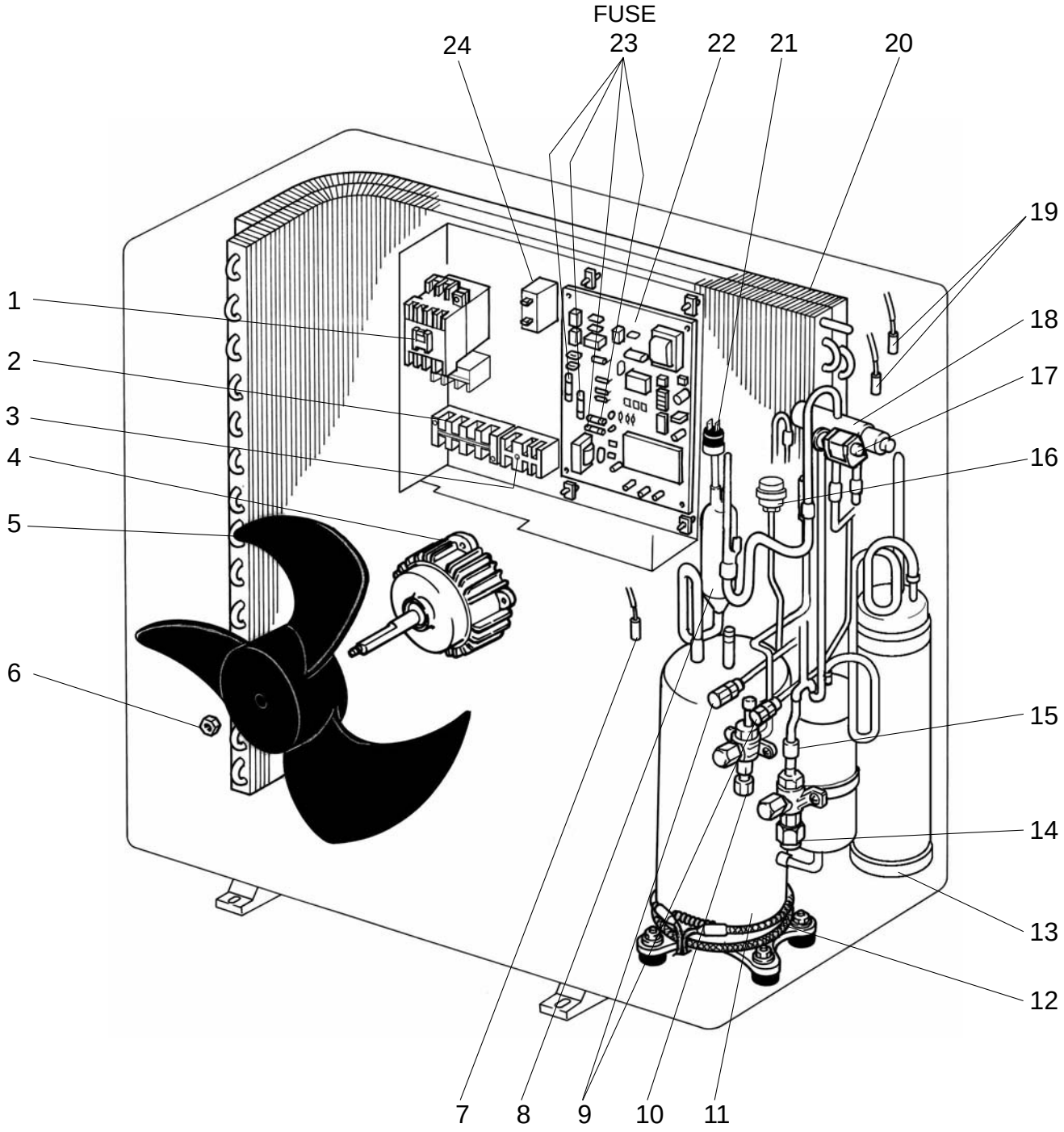

No.	Part No.	Part Name	Specification	Q'ty/set		Remarks	Wining Diagram Symbol	Recom-mended Q'ty	Price	
				PUH-P35Y GAA.UK	PU-P35Y GAA.UK				Unit	Amount
1	S70 250 708	CONTACTOR	MSO-N11	1	1		51C,52C			
2	S70 E10 716	TERMINAL BLOCK	4P(L1,L2,L3,N)	1	1		TB1			
3	S70 E04 716	TERMINAL BLOCK	3P(S1,S2,S3)	1	1		TB2			
4	S70 K05 763	OUTDOOR FAN MOTOR	YDK75-6U	1	1		MF			
5	S70 K04 115	PROPELLER FAN 4		1	1					
6	S70 K01 097	NUT	M6	1	1					
7	S70 E16 202	THERMISTOR (DISCHARGE)		1	1		TH4			
8	S70 E00 467	MUFFLER		1						
9	S70 E00 413	CHARGE PLUG		2	2					
10	S70 200 418	STOP VALVE(LIQUID)	3/8″	1	1					
11	S70 063 400	COMPRESSOR	RE277YFKM	1	1		MC			
12	S70 E02 236	CRANKCASE HEATER	240V / 30W	1	1		CH			
13	S70 E02 440	ACCUMULATOR		1	1					
14	S70 E03 411	BALL VALVE	5/8″	1	1					
15	S70 66L 450	STRAINER	#50-12	1	1					
16	S70 E03 401	LINEAR EXPANSION VALVE		1	1		LEV			
17	S70 350 242	4-WAY VALVE SOLENOID COIL		1			21S4			
18	S70 E01 403	4-WAY VALVE (REVERSING)		1						
19	S70 E15 202	THERMISTOR (LIQUID , CONDENSER / EVAPORATOR)		1	1		TH3, TH6			
20	S70 E00 408	HEAT EXCHANGER		1	1					
21	S70 E00 208	HIGH PRESSURE SWITCH	OFF:3.3MPa ON:2.6MPa	1	1		63H			
22	S70 32L 315	OUTDOOR CONTROLLER BOARD		1	1		O.B			
23	S70 520 239	FUSE	6.3A	4	4	(PART OF BOARD)	FUSE			
24	S70 30L 255	OUTDOOR FAN CAPACITOR	2.2μF 440V	1	1		C3			

FUNCTIONAL PARTS
PUH-P50VGAA.UK PUH-P60VGAA.UK
PU-P50VGAA.UK PU-P60VGAA.UK

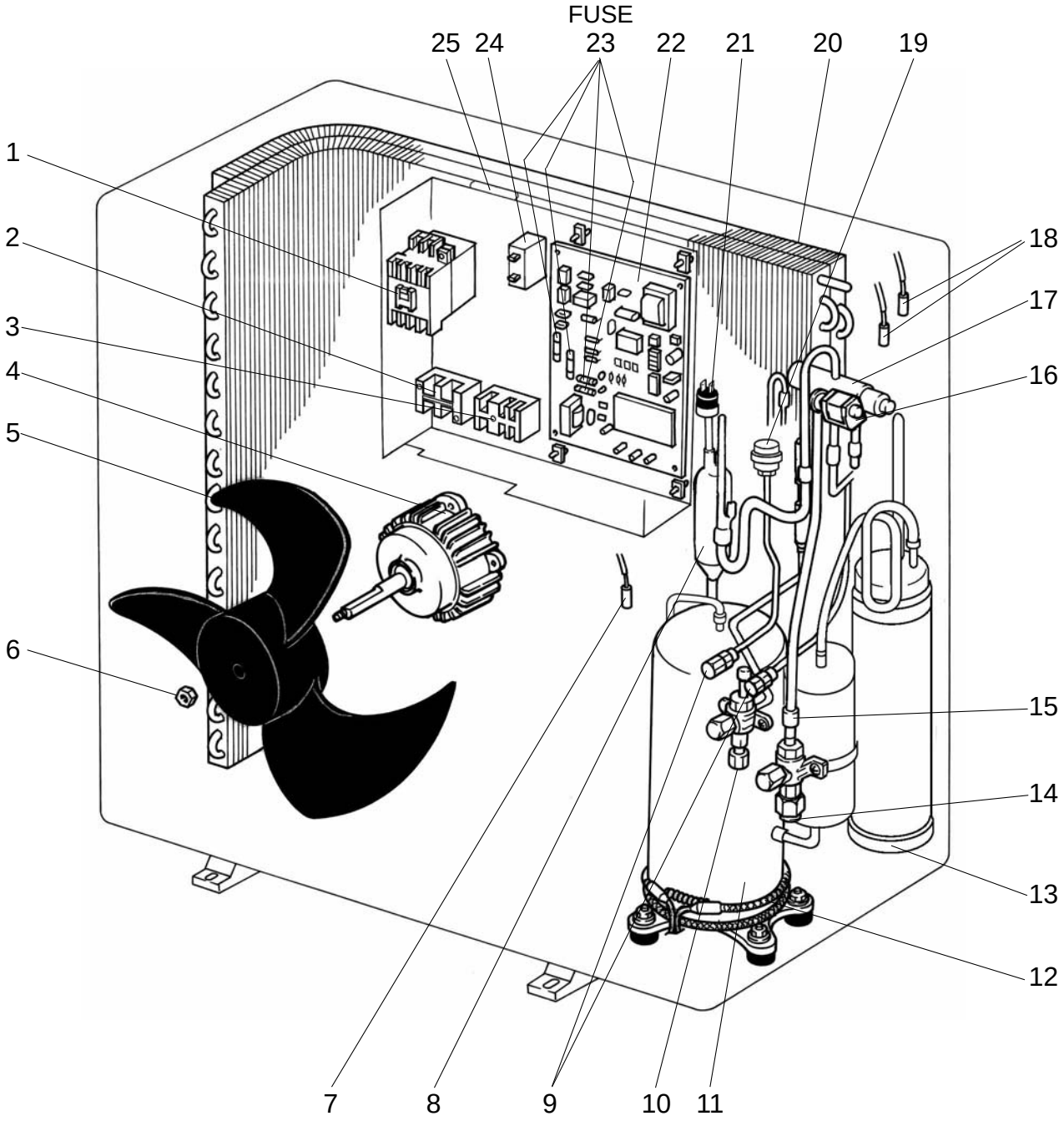

No.	Part No.	Part Name	Specification	Q'ty/set				Remarks	Wiring Diagram Symbol	Recom-mended Q'ty	Price	
				PUH-P•VGAA.UK		PU-P•VGAA.UK					Unit	Amount
				50	60	50	60					
1	S70 330 708	CONTACTOR	S-N18EX	1	1	1	1		52C			
2	S70 E03 716	TERMINAL BLOCK	2P(L,N)	1	1	1	1		TB1			
3	S70 E04 716	TERMINAL BLOCK	3P(S1,S2,S3)	1	1	1	1		TB2			
4	S70 K05 763	OUTDOOR FAN MOTOR	YDK75-6U	1	1	1	1		MF			
5	S70 K04 115	PROPELLER FAN 4		1	1	1	1					
6	S70 K01 097	NUT	M6	1	1	1	1					
7	S70 E16 202	THERMISTOR (DISCHARGE)		1	1	1	1		TH4			
8	S70 36L 467	MUFFLER		1	1							
9	S70 E00 413	CHARGE PLUG		2	2	2	2					
10	S70 300 418	STOP VALVE (LIQUID)	3/8″	1	1	1	1					
11	S70 064 400	COMPRESSOR	NE36VMJMT	1		1			MC			
	S70 066 400	COMPRESSOR	NE41VMJMT		1		1		MC			
12	S70 E04 236	CRANKCASE HEATER	240V / 38W	1	1	1	1		CH			
13	S70 E04 440	ACCUMULATOR		1		1						
	S70 E03 440	ACCUMULATOR			1		1					
14	S70 E04 411	BALL VALVE	5/8″	1	1	1	1					
15	S70 36L 450	STRAINER	#50-16	1	1	1	1					
16	S70 350 242	4-WAY VALVE SOLENOID COIL		1	1				21S4			
17	S70 A00 403	4-WAY VALVE (REVERSING)		1	1							
18	S70 E15 202	THERMISTOR(LIQUID , CONDENSER / EVAPORATOR)		1	1	1	1		TH3, TH6			
19	S70 E02 401	LINEAR EXPANSION VALVE		1	1	1	1		LEV			
20	S70 E02 408	HEAT EXCHANGER		1		1						
	S70 E01 408	HEAT EXCHANGER			1		1					
21	S70 E00 208	HIGH PRESSURE SWITCH	OFF:3.3MPa ON:2.6MPa	1	1	1	1		63H			
22	S70 31L 315	OUTDOOR CONTROLLER BOARD		1	1	1	1		O.B			
23	S70 520 239	FUSE	6.3A	4	4	4	4	(PART OF BOARD)	FUSE			
24	S70 30L 255	OUTDOOR FAN CAPACITOR	2.2μF × 440V	1	1	1	1		C3			
25	S70 100 723	COMPRESSOR CAPACITOR	50μF × 420V	1		1			C5			
	S70 869 723	COMPRESSOR CAPACITOR	45μF × 440V		1		1		C5			

FUNCTIONAL PARTS
PUH-P50YGAA.UK PUH-P50YGAA.UK
PU-P60YGAA.UK PU-P60YGAA.UK

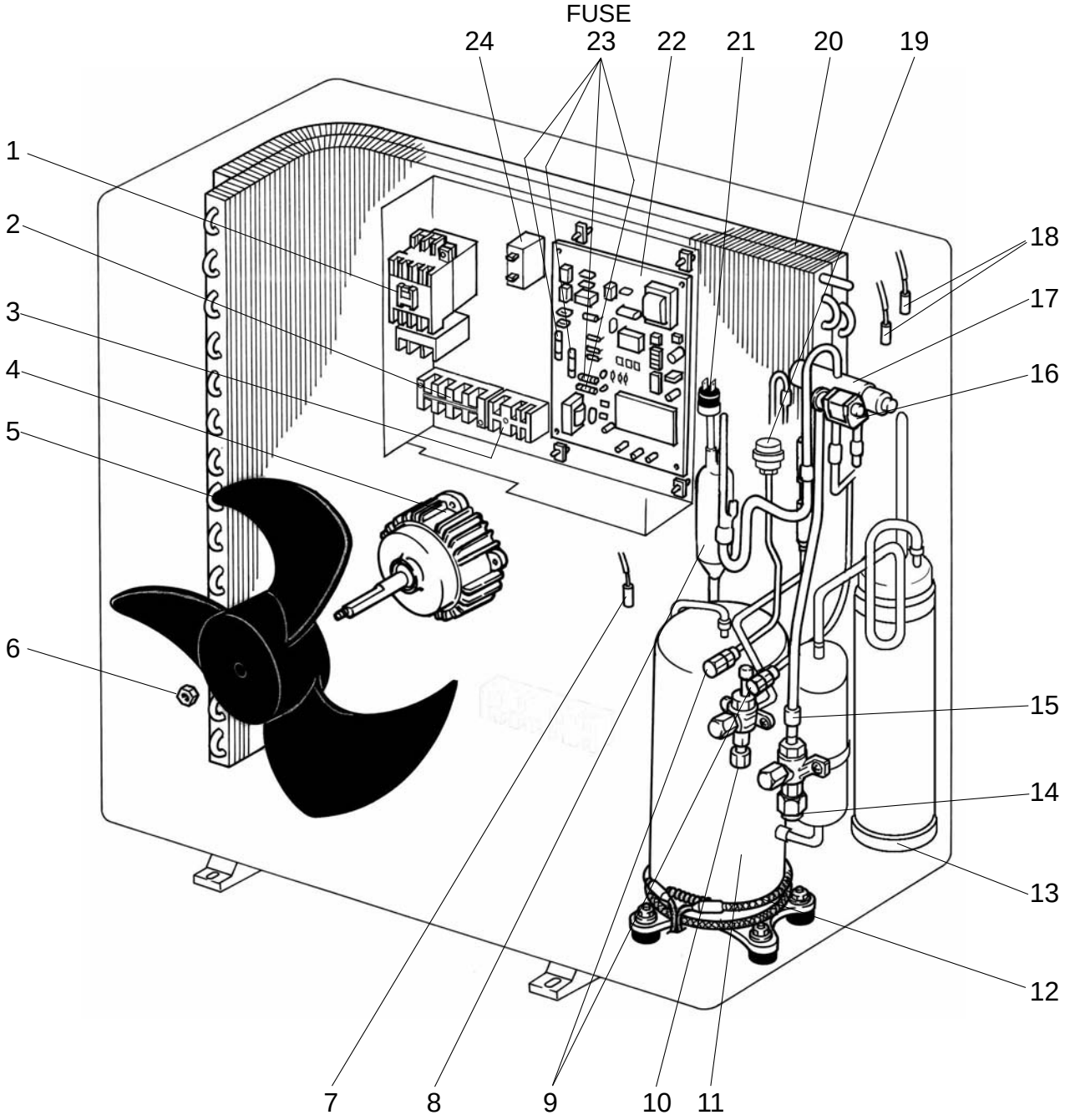

No.	Part No.	Part Name	Specification	Q'ty/set				Remarks	Wiring Diagram Symbol	Recom-mended Q'ty	Price	
				PUH-P•YGAA.UK		PU-P•YGAA.UK					Unit	Amount
				50	60	50	60					
1	S70 332 708	CONTACTOR	MSO-N11	1		1			51C,52C			
	S70 333 708	CONTACTOR	MSO-N11		1		1		51C,52C			
2	S70 E10 716	TERMINAL BLOCK	4P(L1,L2,L3,N)	1	1	1	1		TB1			
3	S70 E04 716	TERMINAL BLOCK	3P(S1,S2,S3)	1	1	1	1		TB2			
4	S70 K05 763	OUTDOOR FAN MOTOR	YDK75-6U	1	1	1	1		MF			
5	S70 K04 115	PROPELLER FAN 4		1	1	1	1					
6	S70 K01 097	NUT	M6	1	1	1	1					
7	S70 E16 202	THERMISTOR (DISCHARGE)		1	1	1	1		TH4			
8	S70 36L 467	MUFFLER		1	1							
9	S70 E00 413	CHARGE PLUG		2	2	2	2					
10	S70 300 418	STOP VALVE (LIQUID)	3/8″	1	1	1	1					
11	S70 065 400	COMPRESSOR	NE36YEKMT	1		1			MC			
	S70 067 400	COMPRESSOR	NE41YEKMT		1		1		MC			
12	S70 E04 236	CRANKCASE HEATER	240V 38W	1	1	1	1		CH			
13	S70 E04 440	ACCUMULATOR		1		1						
	S70 E03 440	ACCUMULATOR			1		1					
14	S70 E04 411	BALL VALVE	5/8″	1	1	1	1					
15	S70 36L 450	STRAINER	#50-16	1	1	1	1					
16	S70 350 242	4-WAY VALVE SOLENOID COIL		1	1				21S4			
17	S70 A00 403	4-WAY VALVE (REVERSING)		1	1							
18	S70 E15 202	THERMISTOR(LIQUID , CONDENSER / EVAPORATOR)		1	1	1	1		TH3, TH6			
19	S70 E02 401	LINEAR EXPANSION VALVE		1	1	1	1		LEV			
20	S70 E02 408	HEAT EXCHANGER		1		1						
	S70 E01 408	HEAT EXCHANGER			1		1					
21	S70 E00 208	HIGH PRESSURE SWITCH	OFF:3.3MPa ON:2.6MPa	1	1	1	1		63H			
22	S70 32L 315	OUTDOOR CONTROLLER BOARD		1	1	1	1		O.B			
23	S70 520 239	FUSE	6.3A	4	4	4	4	(PART OF BOARD)	FUSE			
24	S70 30L 255	OUTDOOR FAN CAPACITOR	2.2μF × 440V	1	1	1	1		C3			

FUNCTIONAL PARTS
PUH-P71VGAA.UK
PU-P71VGAA.UK

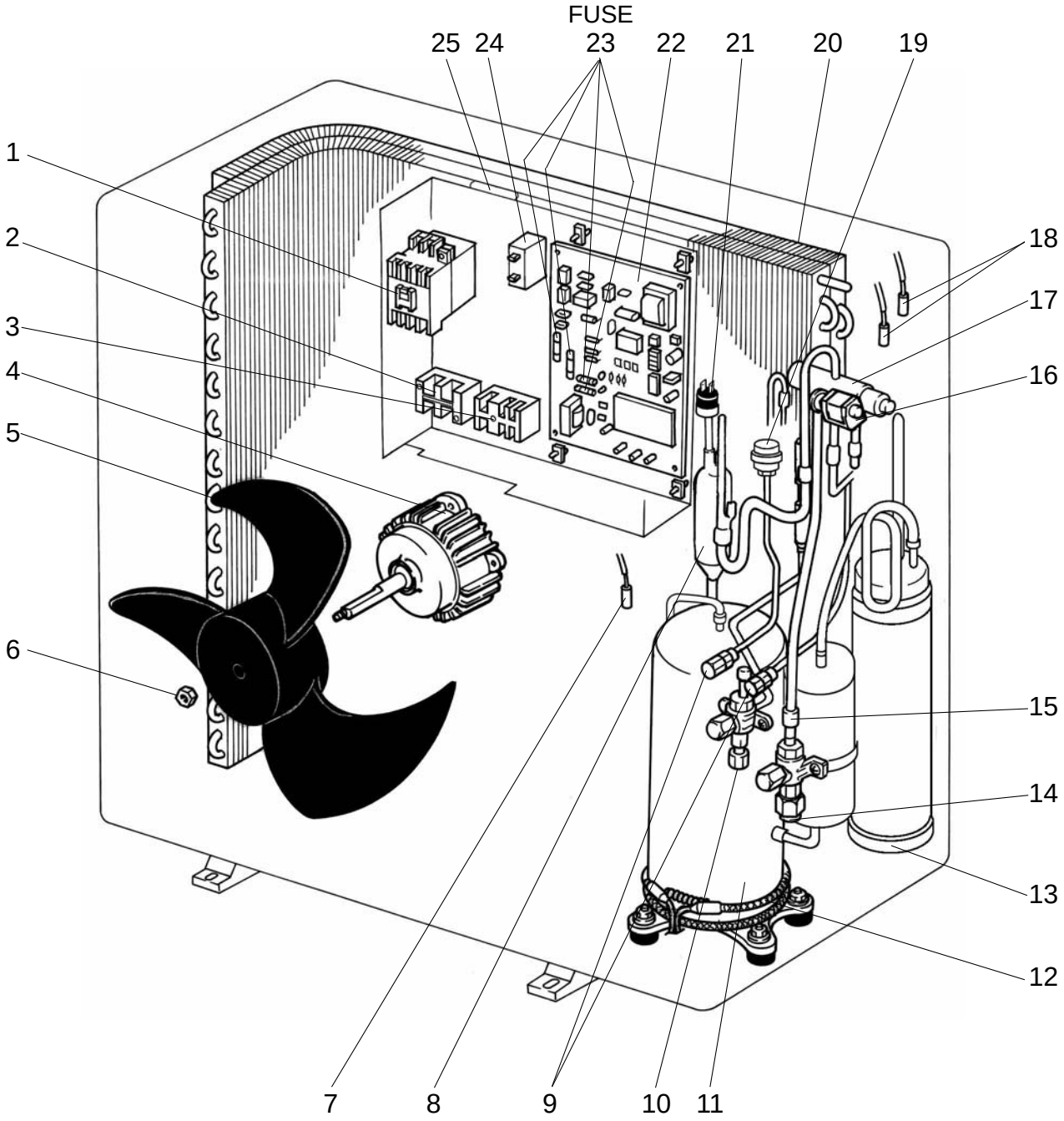

No.	Part No.	Part Name	Specification	Q'ty/set		Remarks	Wiring Diagram Symbol	Recom-mended Q'ty	Price	
				PUH-P71V	PU-P71V				Unit	Amount
				GAA.UK	GAA.UK					
1	S70 330 708	CONTACTOR	S-N18EX	1	1		52C			
2	S70 E03 716	TERMINAL BLOCK	2P(L,N)	1	1		TB1			
3	S70 E04 716	TERMINAL BLOCK	3P(S1,S2,S3)	1	1		TB2			
4	S70 K05 763	OUTDOOR FAN MOTOR	YDK75-6U	1	1		MF			
5	S70 K04 115	PROPELLER FAN 4		1	1					
6	S70 K01 097	NUT	M6	1	1					
7	S70 E16 202	THERMISTOR (DISCHARGE)		1	1		TH4			
8	S70 36L 467	MUFFLER		1						
9	S70 E00 413	CHARGE PLUG		2	2					
10	S70 300 418	STOP VALVE (LIQUID)	3/8″	1	1					
11	S70 068 400	COMPRESSOR	NE52VNJMT	1	1		MC			
12	S70 E04 236	CRANKCASE HEATER	240V / 38W	1	1		CH			
13	S70 E03 440	ACCUMULATOR		1	1					
14	S70 E04 411	BALL VALVE	5/8″	1	1					
15	S70 36L 450	STRAINER	#50-16	1	1					
16	S70 350 242	4-WAY VALVE SOLENOID COIL		1			21S4			
17	S70 A00 403	4-WAY VALVE (REVERSING)		1						
18	S70 E15 202	THERMISTOR(LIQUID , CONDENSER / EVAPORATOR)		1	1		TH3, TH6			
19	S70 E02 401	LINEAR EXPANSION VALVE		1	1		LEV			
20	S70 E03 408	HEAT EXCHANGER		1	1					
21	S70 E00 208	HIGH PRESSURE SWITCH	OFF:3.3MPa ON:2.6MPa	1	1		63H			
22	S70 31L 315	OUTDOOR CONTROLLER BOARD		1	1		O.B			
23	S70 520 239	FUSE	6.3A	4	4	(PART OF BOARD)	FUSE			
24	S70 30L 255	OUTDOOR FAN CAPACITOR	2.2μF × 440V	1	1		C3			
25	S70 976 723	COMPRESSOR CAPACITOR	60μF × 450V	1	1		C5			

FUNCTIONAL PARTS
PUH-P71YGAA.UK
PU-P71YGAA.UK

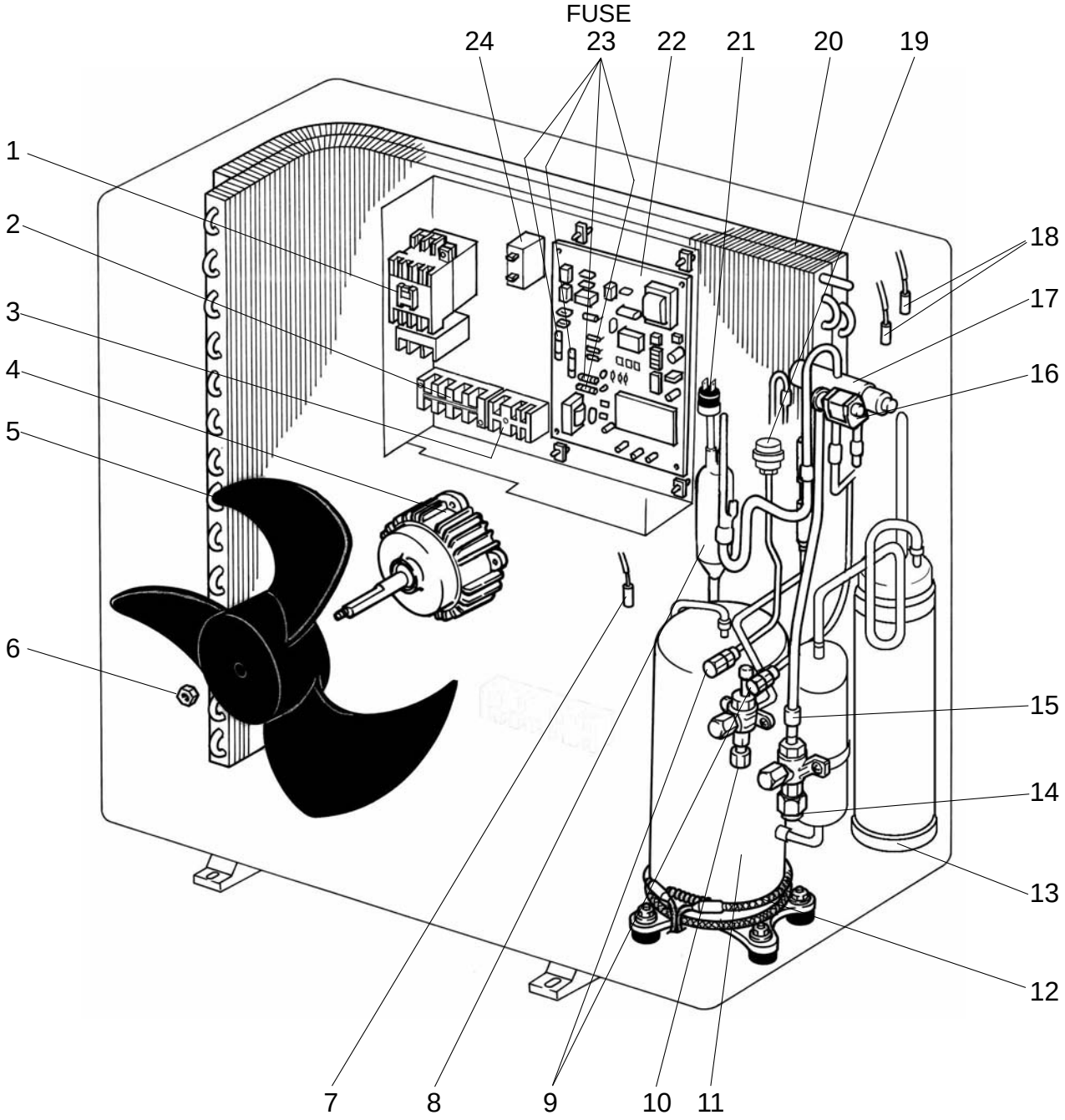

No.	Part No.	Part Name	Specification	Q'ty/set		Remarks	Wiring Diagram Symbol	Recom-mended Q'ty	Price	
				PUH-P71Y	PU-P71Y				Unit	Amount
				GAA.UK	GAA.UK					
1	S70 331 708	CONTACTOR	MSO-N11	1	1		51C,52C			
2	S70 E10 716	TERMINAL BLOCK	4P(L1,L2,L3,N)	1	1		TB1			
3	S70 E04 716	TERMINAL BLOCK	3P(S1,S2,S3)	1	1		TB2			
4	S70 K05 763	OUTDOOR FAN MOTOR	YDK75-6U	1	1		MF			
5	S70 K04 115	PROPELLER FAN 4		1	1					
6	S70 K01 097	NUT	M6	1	1					
7	S70 E16 202	THERMISTOR (DISCHARGE)		1	1		TH4			
8	S70 36L 467	MUFFLER		1						
9	S70 E00 413	CHARGE PLUG		2	2					
10	S70 300 418	STOP VALVE (LIQUID)	3/8″	1	1					
11	S70 069 400	COMPRESSOR	NE52YDKMT	1	1		MC			
12	S70 E04 236	CRANKCASE HEATER	240V / 38W	1	1		CH			
13	S70 E03 440	ACCUMULATOR		1	1					
14	S70 E04 411	BALL VALVE	5/8″	1	1					
15	S70 36L 450	STRAINER	#50-16	1	1					
16	S70 350 242	4-WAY VALVE SOLENOID COIL		1			21S4			
17	S70 A00 403	4-WAY VALVE (REVERSING)		1						
18	S70 E15 202	THERMISTOR(LIQUID , CONDENSER / EVAPORATOR)		1	1		TH3, TH6			
19	S70 E02 401	LINEAR EXPANSION VALVE		1	1		LEV			
20	S70 E03 408	HEAT EXCHANGER		1	1					
21	S70 E00 208	HIGH PRESSURE SWITCH	OFF:3.3MPa ON:2.6MPa	1	1		63H			
22	S70 32L 315	OUTDOOR CONTROLLER BOARD		1	1		O.B			
23	S70 520 239	FUSE	6.3A	4	4	(PART OF BOARD)	FUSE			
24	S70 30L 255	OUTDOOR FAN CAPACITOR	2.2μF × 440V	1	1		C3			

FUNCTIONAL PARTS
PUH-P100VGAA.UK
PU-P100VGAA.UK

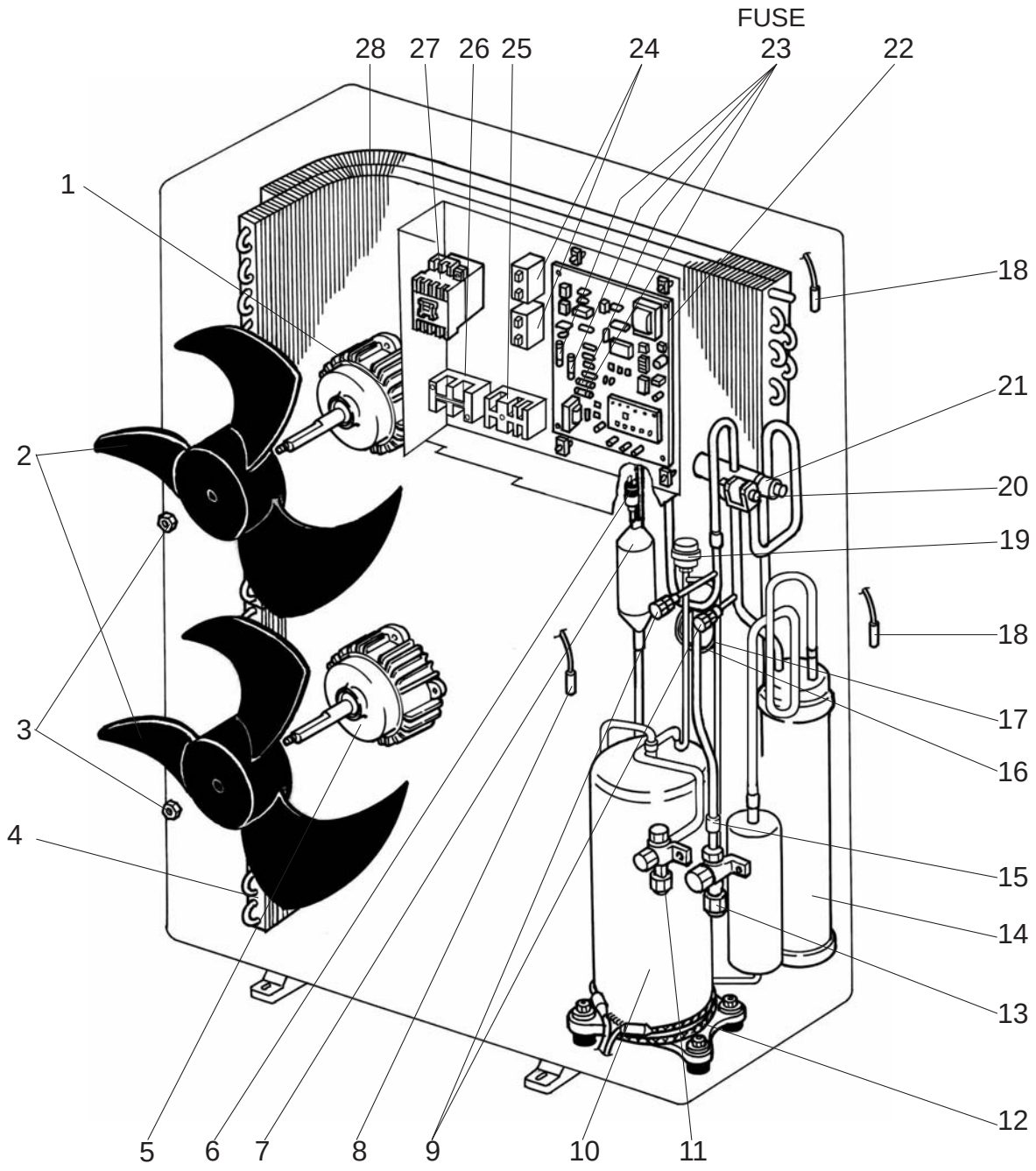

Part number that are circled are not shown in the figure.

No.	Part No.	Part Name	Specification	Q'ty/set		Remarks	Wiring Diagram Symbol	Recom-mended Q'ty	Price	
				PUH-P100V	PU-P100V				Unit	Amount
				GAA.UK	GAA.UK					
1	S70 E03 763	OUTDOOR FAN MOTOR	N026P72MT	1	1		MF			
2	S70 30L 115	PROPELLER FAN 4		2	2					
3	S70 30L 097	NUT	M8	2	2					
4	S70 E05 408	HEAT EXCHANGER		1	1					
5	S70 E04 763	OUTDOOR FAN MOTOR	N02A672MT	1	1		MF			
6	S70 E00 208	HIGH PRESSURE SWITCH	OFF:3.3MPa ON:2.6MPa	1	1		63H			
7	S70 42L 467	MUFFLER		1						
8	S70 E18 202	THERMISTOR (DISCHARGE)		1	1		TH4			
9	S70 E00 413	CHARGE PLUG		2	2					
10	S70 071 400	COMPRESSOR	NE56VNJMT	1	1		MC			
11	S70 300 418	STOP VALVE (LIQUID)	3/8″	1	1					
12	S70 E05 236	CRANKCASE HEATER	240V / 38W	1	1		CH			
13	S70 E05 411	BALL VALVE	3/4″	1	1					
14	S70 E05 440	ACCUMULATOR		1	1					
15	S70 42L 450	STRAINER	#50-19.1	1	1					
16	S70 E01 425	CAPILLARY TUBE	ϕ4.0 X ϕ3.0 X 350mm	1	1					
17	S70 E02 425	CAPILLARY TUBE	ϕ4.0 X ϕ3.0 X 350mm	1	1					
18	S70 E14 202	THERMISTOR(LIQUID , CONDENSER / EVAPORATOR)		1	1		TH3, TH6			
19	S70 E05 401	LINEAR EXPANSION VALVE		1	1		LEV			
20	S70 350 242	4-WAY VALVE SOLENOID COIL		1			21S4			
21	S70 260 403	4-WAY VALVE (REVERSING)		1						
22	S70 31L 315	OUTDOOR CONTROLLER BOARD		1	1		O.B			
23	S70 520 239	FUSE	6.3A	4	4	(PART OF BOARD)	FUSE			
24	S70 30L 255	OUTDOOR FAN CAPACITOR	2.2μF × 440V	2	2		C3, C4			
25	S70 E04 716	TERMINAL BLOCK	3P(S1,S2,S3)	1	1		TB2			
26	S70 E03 716	TERMINAL BLOCK	2P(L,N)	1	1		TB1			
27	S70 330 708	CONTACTOR	S-N18EX	1	1		52C			
28	S70 E04 408	HEAT EXCHANGER		1	1					
29	S70 976 723	COMPRESSOR CAPACITOR	60μF × 450V	1	1		C5			

FUNCTIONAL PARTS
PUH-P100YGAA.UK
PU-P100YGAA.UK

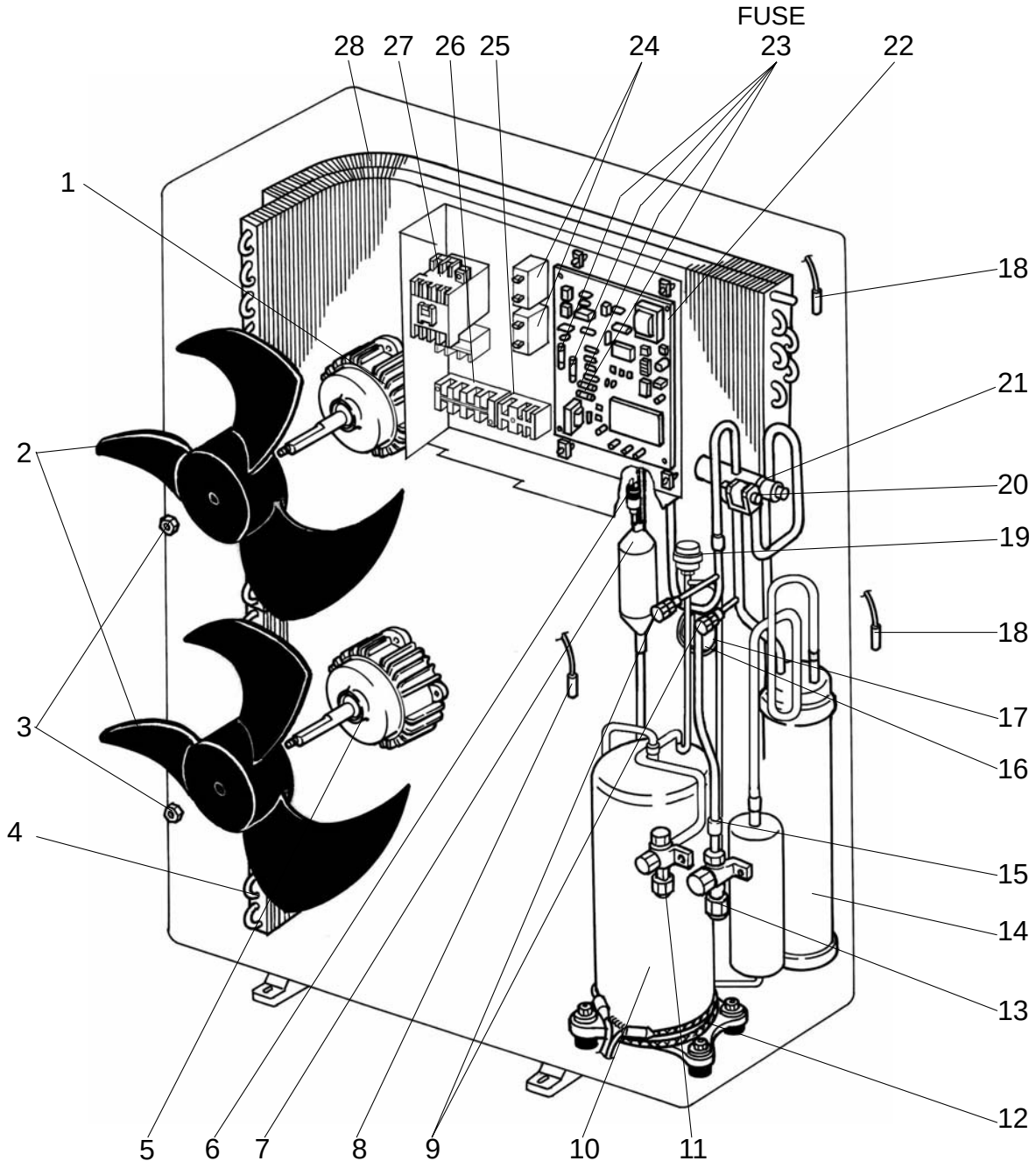

No.	Part No.	Part Name	Specification	Q'ty/set		Remarks	Wining Diagram Symbol	Recom-mended Q'ty	Price	
				PUH-100Y	PU-P100Y				Unit	Amount
				GAA.UK	GAA.UK					
1	S70 E03 763	OUTDOOR FAN MOTOR	N026P72MT	1	1		MF			
2	S70 30L 115	PROPELLER FAN 4		2	2					
3	S70 30L 097	NUT	M8	2	2					
4	S70 E05 408	HEAT EXCHANGER		1	1					
5	S70 E04 763	OUTDOOR FAN MOTOR	N02A672MT	1	1		MF			
6	S70 E00 208	HIGH PRESSURE SWITCH	OFF:3.3MPa ON:2.6MPa	1	1		63H			
7	S70 42L 467	MUFFLER		1						
8	S70 E18 202	THERMISTOR (DISCHARGE)		1	1		TH4			
9	S70 E00 413	CHARGE PLUG		2	2					
10	S70 070 400	COMPRESSOR	NE56YDKMT	1	1		MC			
11	S70 300 418	STOP VALVE (LIQUID)	3/8˝	1	1					
12	S70 E05 236	CRANKCASE HEATER	240V / 38W	1	1		CH			
13	S70 E05 411	BALL VALVE	3/4˝	1	1					
14	S70 E05 440	ACCUMULATOR		1	1					
15	S70 42L 450	STRAINER	#50-19.1	1	1					
16	S70 E01 425	CAPILLARY TUBE	ϕ4.0 X ϕ3.0 X 350mm	1	1					
17	S70 E02 425	CAPILLARY TUBE	ϕ4.0 X ϕ3.0 X 350mm	1	1					
18	S70 E14 202	THERMISTOR(LIQUID , CONDENSER / EVAPORATOR)		1	1		TH3, TH6			
19	S70 E05 401	LINEAR EXPANSION VALVE		1	1		LEV			
20	S70 350 242	4-WAY VALVE SOLENOID COIL		1			21S4			
21	S70 260 403	4-WAY VALVE (REVERSING)		1						
22	S70 32L 315	OUTDOOR CONTROLLER BOARD		1	1		O.B			
23	S70 520 239	FUSE	6.3A	4	4	(PART OF BOARD)	FUSE			
24	S70 30L 255	OUTDOOR FAN CAPACITOR	2.2μF X 440V	2	2		C3, C4			
25	S70 E04 716	TERMINAL BLOCK	3P(S1,S2,S3)	1	1		TB2			
26	S70 E10 716	TERMINAL BLOCK	4P(L1,L2,L3,N)	1	1		TB1			
27	S70 331 708	CONTACTOR	MSO-N11	1	1		51C, 52C			
28	S70 E04 408	HEAT EXCHANGER		1	1					

FUNCTIONAL PARTS
PUH-P125YGAA.UK PUH-P140YGAA.UK
PU-P125YGAA.UK PU-P140YGAA.UK

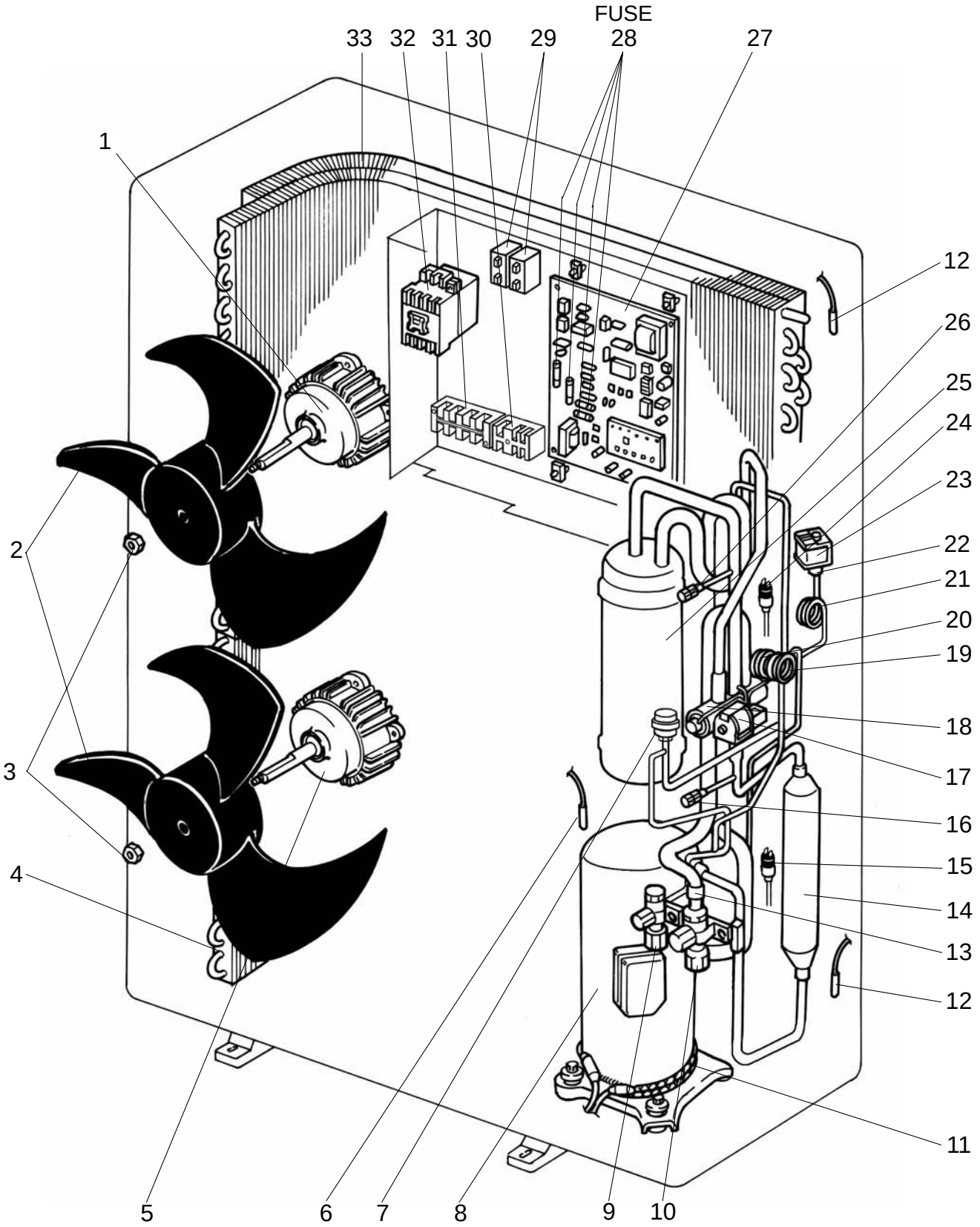

Part number that is circled is not shown in the figure.

No.	Part No.	Part Name	Specification	Q'ty/set				Remarks	Wiring Diagram Symbol	Recom-mended Q'ty	Price	
				PUH-P•YGAA.UK		PU-P•YGAA.UK					Unit	Amount
				125	140	125	140					
1	S70 E03 763	OUTDOOR FAN MOTOR	N026P72MT	1	1	1	1		MF			
2	S70 30L 115	PROPELLER FAN 4		2	2	2	2					
3	S70 30L 097	NUT	M8	2	2	2	2					
4	S70 E07 408	HEAT EXCHANGER (UNDER)		1	1	1	1					
5	S70 E04 763	OUTDOOR FAN MOTOR	N02A672MT	1	1	1	1		MF			
6	S70 E19 202	THERMISTOR (DISCHARGE)		1	1	1	1		TH4			
7	S70 E06 401	LINEAR EXPANSION VALVE		1	1	1	1		LEV			
8	S70 H10 400	COMPRESSOR	BE82YADMT	1		1			MC			
	S70 H60 400	COMPRESSOR	BE96YADMT		1		1		MC			
9	S70 300 418	STOP VALVE (LIQUID)	3/8"	1	1	1	1					
10	S70 E05 411	BALL VALVE	3/4"	1	1	1	1					
11	S70 H40 236	CRANKCASE HEATER	240V / 38W	1	1	1	1		CH			
12	S70 E17 202	THERMISTOR(LIQUID, CONDENSER/EVAPORATOR)		1	1	1	1		TH3, TH6			
13	S70 42L 450	STRAINER	#50-19.1	1	1	1	1					
14	S70 42H 467	MUFFLER		1	1							
15	S70 E00 208	HIGH PRESSURE SWITCH	OFF:3.3MPa ON :2.6MPa	1	1	1	1		63H			
16	S70 E01 413	CHARGE PLUG		1	1	1	1					
17	S70 251 242	4-WAY VALVE SOLENOID COIL		1	1				21S4			
18	S70 E02 403	4-WAY VALVE (REVERSING)		1	1							
19	S70 E05 425	CAPILLARY TUBE	ϕ4.0 X ϕ3.0 X 200mm	1	1	1	1					
20	S70 E06 425	CAPILLARY TUBE	ϕ4.0 X ϕ3.0 X 200mm	1	1	1	1					
21	S70 E03 425	CAPILLARY TUBE	ϕ4.0 X ϕ2.0 X 400mm	1								
	S70 E04 425	CAPILLARY TUBE	ϕ4.0 X ϕ3.0 X 450mm		1							
22	S70 A14 428	BYPASS VALVE		1	1							
23	S70 351 242	BYPASS VALVE SOLENOID COIL		1	1				SV			
24	S70 H20 209	LOW PRESSURE SWITCH	OFF:-0.03MPa ON :0.05MPa	1	1	1	1		63L			
25	S70 E06 440	ACCUMULATOR		1	1	1	1					
26	S70 E00 413	CHARGE PLUG		1	1	1	1					
27	S70 33H 315	OUTDOOR CONTROLLER BOARD		1	1	1	1		O.B			
28	S70 520 239	FUSE	6.3A	4	4	4	4	(PART OF BOARD)	FUSE			
29	S70 17T 255	FAN MOTOR CAPACITOR	3.5μF × 440V	2	2	2	2		C3, C4			
30	S70 E04 716	TERMINAL BLOCK	3P(S1,S2,S3)	1	1	1	1		TB2			
31	S70 E10 716	TERMINAL BLOCK	4P(L1,L2,L3,N)	1	1	1	1		TB1			
32	S70 334 708	CONTACTOR	MSO-N20	1	1	1	1		51C, 52C			
33	S70 H12 408	HEAT EXCHANGER (TOP)		1	1	1	1					
34	S70 30L 450	STRAINER	#50-9.52	1	1	1	1					
35	S70 H30 450	STRAINER ASSY		1	1	1	1					

Mr.SLIM™

MITSUBISHI ELECTRIC CORPORATION
HEAD OFFICE : MITSUBISHI DENKI BLDG., 2-2-3, MARUNOUCHI, CHIYODA-KU, TOKYO 100-8310, JAPAN

Distributed in Aug. 2005 No.OC336 PDF 8
Made in Japan.

New publication, effective Aug. 2005.
Specifications subject to change without notice.