MITSUBISHI ELECTRIC

Changes for the Better

SPLIT-TYPE, HEAT PUMP AIR CONDITIONERS

December 2009

No.OCB425
REVISED EDITION-B

PARTS CATALOG

R410A

Outdoor unit [model names]	[Service Ref.]
PUHZ-HRP71VHA	PUHZ-HRP71VHA
PUHZ-HRP100VHA	PUHZ-HRP100VHA
PUHZ-HRP100YHA	PUHZ-HRP100YHA
PUHZ-HRP125YHA	PUHZ-HRP125YHA
PUHZ-HRP71VHA2	PUHZ-HRP71VHA2 PUHZ-HRP71VHA2R1
PUHZ-HRP100VHA2	PUHZ-HRP100VHA2 PUHZ-HRP100VHA2R1
PUHZ-HRP100YHA2	PUHZ-HRP100YHA2 PUHZ-HRP100YHA2R1
PUHZ-HRP125YHA2	PUHZ-HRP125YHA2 PUHZ-HRP125YHA2R1

Revision:
- PUHZ-HRP71/100VHA2R1 and PUHZ-HRP100/125YHA2R1 are added in REVISED EDITION-B.
- Some descriptions have been modified.

- Please void OCB425 REVISED EDITION-A.

NOTE:
- This manual describes only service data of the outdoor units.
- RoHS compliant products have <G> mark on the spec name plate.

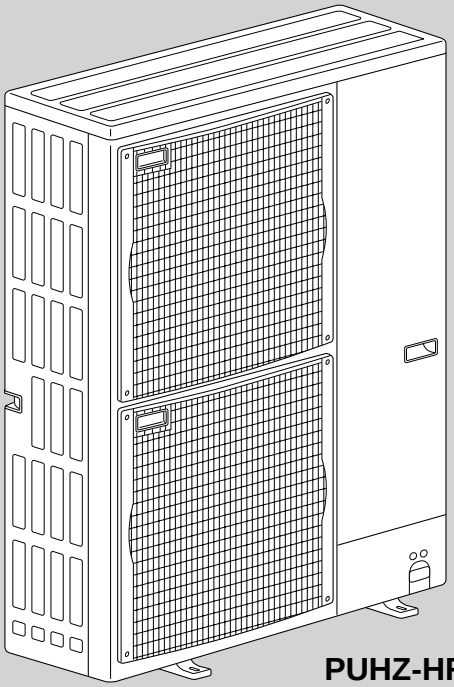

PUHZ-HRP71VHA
PUHZ-HRP100VHA
PUHZ-HRP100YHA
PUHZ-HRP125YHA

CONTENTS

1. RoHS PARTS LIST 2
2. OPTIONAL PARTS (PAC-SE60RA-E) 12

SERVICE MANUAL (OCH425)

Mr.SLIM™

1 RoHS PARTS LIST

FUNCTIONAL AND ELECTRICAL PARTS
PUHZ-HRP71VHA
PUHZ-HRP100VHA

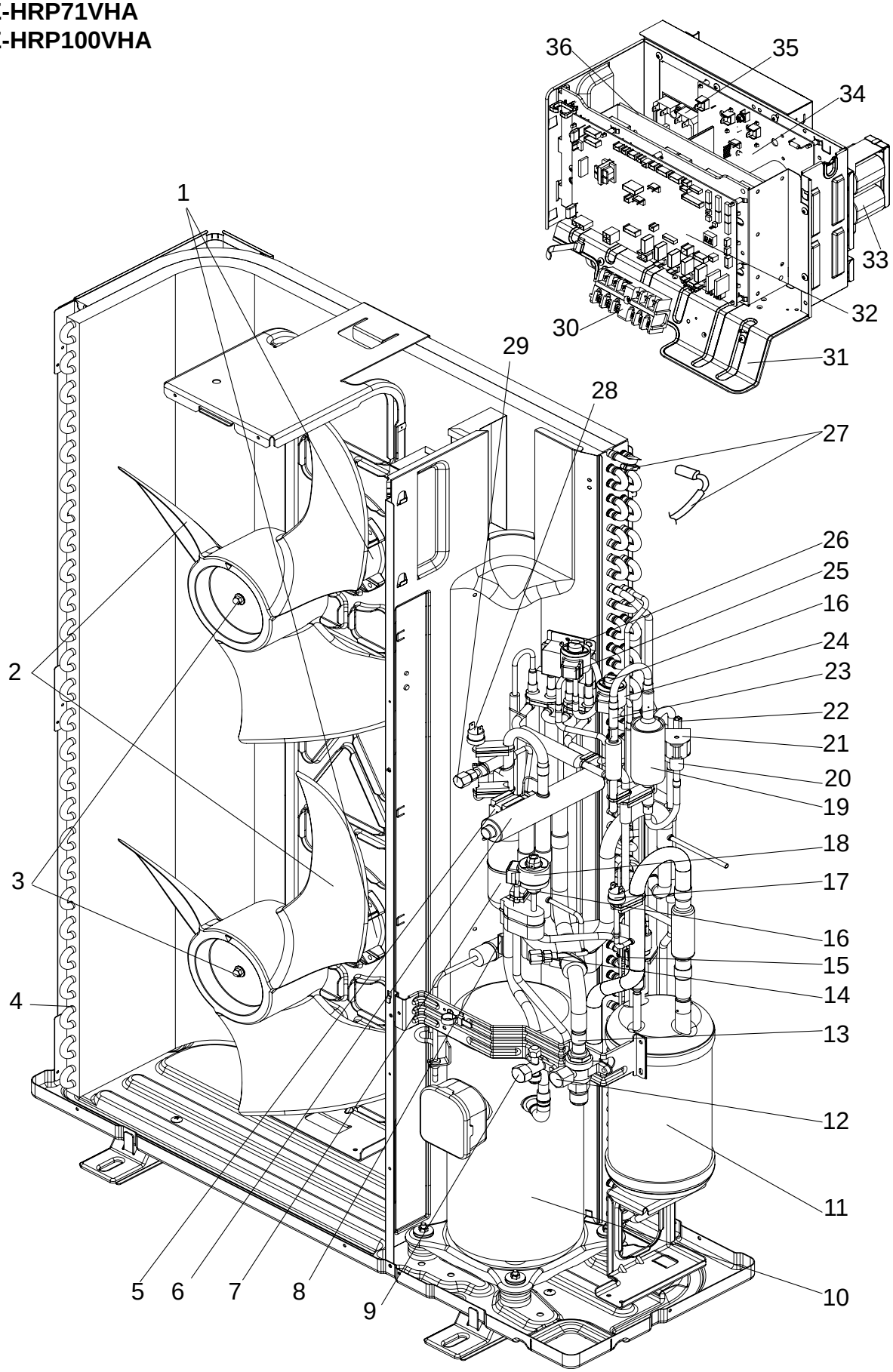

Part numbers that are circled are not shown in the figure.

No.	RoHS	Part No.	Part Name	Specification	Q'ty/set PUHZ-HRP 71 VHA	Q'ty/set PUHZ-HRP 100 VHA	Remarks (Drawing No.)	Wiring Diagram Symbol	Recom-mended Q'ty
1	G	T7W E27 763	FAN MOTOR	EHDS81B86MS1	2	2		MF1,2	
2	G	R01 E08 115	PROPELLER FAN		2	2			
3	G	R01 E09 097	NUT		2	2			
4	G	R01 H01 408	HEAT EXCHANGER		1	1			
5	G	T7W E41 242	SOLENOID COIL <4-WAY VALVE>		1	1		21S4	
6	G	R01 E32 403	4-WAY VALVE		1	1			
7	G	R01 E10 467	MUFFLER		1	1			
8	G	R01 E14 201	THERMISTOR (DISCHARGE)		1	1		TH4	
9	G	R01 E13 410	STOP VALVE	3/8	1	1			
10	G	T97 415 758	COMPRESSOR	ANB33FJCMT	1	1	Including RUBBER MOUNTS	MC	
11	G	R01 E43 440	POWER RECEIVER		1	1			
12	G	R01 E12 410	BALL VALVE	5/8	1	1			
13	G	R01 32L 450	STRAINER		1	1			
14	G	R01 E14 413	CHARGE PLUG		1	1			
15	G	T7W E53 202	THERMISTOR (OUTDOOR PIPE)		1	1		TH32	
16	G	R01 H20 401	LINEAR EXPANSION VALVE		2	2			
17	G	R01 E00 209	LOW PRESSURE SWITCH		1	1		63L	
18	G	R01 E49 242	LINEAR EXPANSION VALVE COIL		1	1	Connector:Red	LEV-B	
19	G	—	REPLACE FILTER		1	1	(BK00C119G02)		
20	G	R01 E13 428	BYPASS VALVE		1	1			
21	G	T7W E36 242	SOLENOID COIL <BYPASS VALVE>		1	1		SV	
22	G	T7W E52 202	THERMISTOR (OUTDOOR PIPE)		1	1		TH33	
23	G	R01 E03 418	RESTRICTOR VALVE		1	1			
24	G	R01 E50 242	LINEAR EXPANSION VALVE COIL		1	1	Connector:White	LEV-A	
25	G	R01 E68 242	LINEAR EXPANSION VALVE COIL		1	1	Connector:Blue	LEV-C	
26	G	R01 H22 401	LINEAR EXPANSION VALVE		1	1			
27	G	R01 E94 202	THERMISTOR (OUTDOOR 2-PHASE PIPE, OUTDOOR)		1	1		TH6,7	
28	G	R01 E06 208	HIGH PRESSURE SWITCH		1	1		63H	
29	G	R01 E25 413	CHARGE PLUG		1	1			
30	G	T7W E29 716	TERMINAL BLOCK	6P(L,N,⏚,S1,S2,S3)	1	1		TB1	
31	G	—	ELECTRICAL PARTS BOX		1	1	(BK00B055G31)		
32	G	T7W E58 315	CONTROLLER CIRCUIT BOARD		1	1		C.B.	
33	G	R01 E20 259	REACTOR		1	1		DCL	
34	G	R01 E65 313	POWER CIRCUIT BOARD		1	1		P.B.	
35	G	R01 E07 233	ACTIVE FILTER MODULE		1	1		ACTM	
36	G	T7W E22 346	NOISE FILTER CIRCUIT BOARD		1	1		N.F.	
37	G	R01 E99 202	THERMISTOR (HEATSINK)		1	1		TH8	
38	G	R01 E06 239	FUSE	250V 6.3A	4	4		F1,2,3,4	
39	G	R01 H00 202	THERMISTOR (OUTDOOR PIPE)		1	1		TH3	
40	G	R01 E22 255	MAIN SMOOTHING CAPACITOR		1	1		CB	

FUNCTIONAL AND ELECTRICAL PARTS
PUHZ-HRP71VHA2
PUHZ-HRP100VHA2
PUHZ-HRP71VHA2R1
PUHZ-HRP100VHA2R1

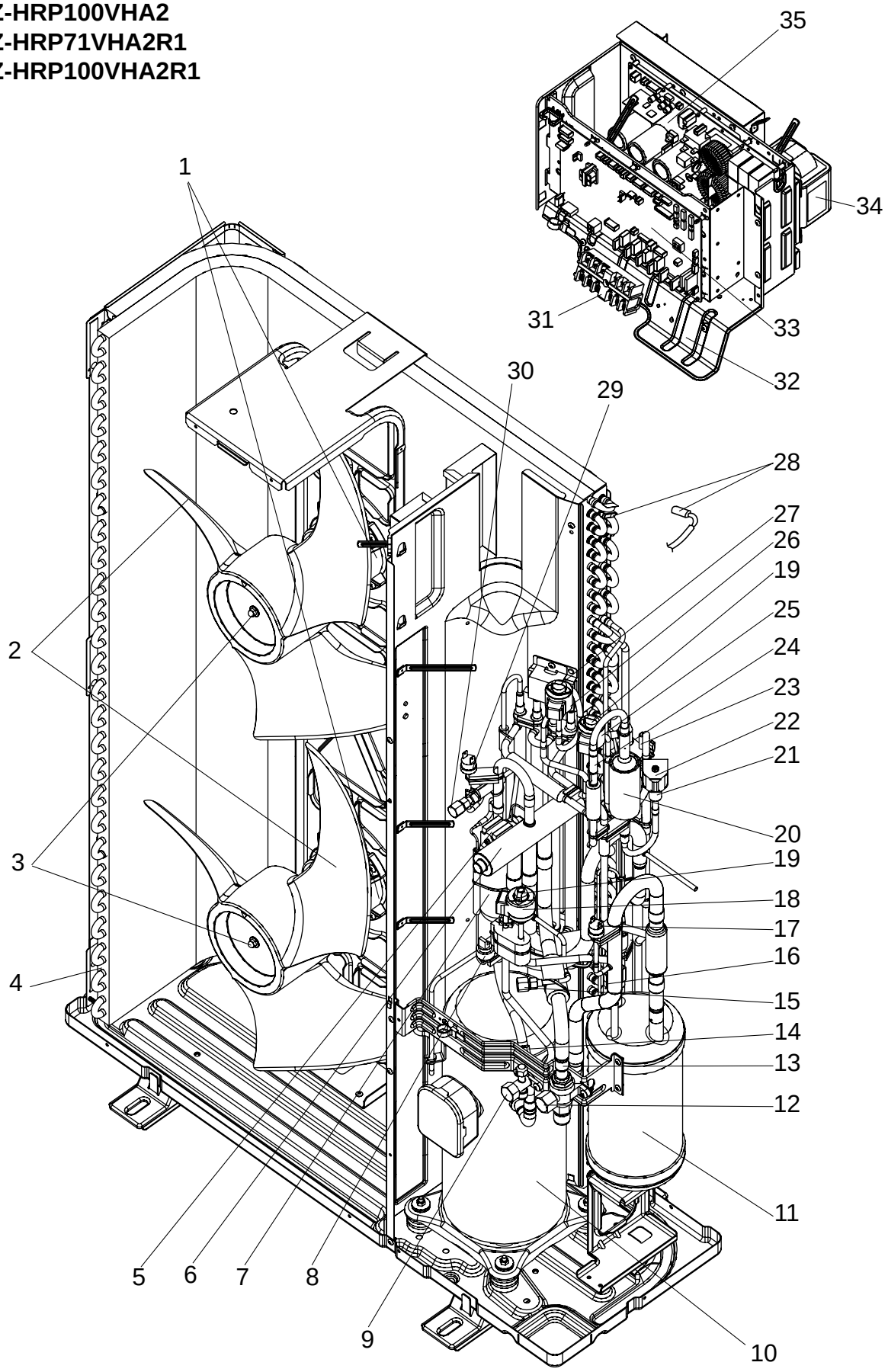

Part numbers that are circled are not shown in the figure.

No.	RoHS	Part No.	Part Name	Specification	Q'ty/set PUHZ-HRP 71, 100 VHA2	VHA2R1	Remarks (Drawing No.)	Wiring Diagram Symbol	Recom-mended Q'ty
1	G	R01 E50 221	FAN MOTOR	SIC-71FW-D874	2	2		MF1,2	
2	G	R01 E08 115	PROPELLER FAN		2	2			
3	G	R01 E09 097	NUT		2	2			
4	G	R01 H01 408	HEAT EXCHANGER		1	1			
5	G	T7W E41 242	SOLENOID COIL <4-WAY VALVE>		1	1		21S4	
6	G	R01 E32 403	4-WAY VALVE		1				
	G	R01 E15 403	4-WAY VALVE			1			
7	G	R01 E10 467	MUFFLER		1	1			
8	G	R01 E07 208	HIGH PRESSURE SENSOR		1	1		63HS	
9	G	R01 E13 410	STOP VALVE	3/8	1	1			
10	G	T97 415 767	COMPRESSOR	ANB33FJEMT	1	1	Including RUBBER MOUNTS	MC	
11	G	R01 E43 440	POWER RECEIVER		1	1			
12	G	R01 E12 410	BALL VALVE	5/8	1	1			
13	G	R01 32L 450	STRAINER		1	1			
14	G	T7W E05 201	THERMISTOR (DISCHARGE)		1			TH4	
	G	R01 E22 201	THERMISTOR (DISCHARGE)			1		TH4	
15	G	R01 E14 413	CHARGE PLUG		1				
	G	T7W E11 413	CHARGE PLUG			1			
16	G	R01 H32 202	THERMISTOR (OUTDOOR PIPE)		1	1		TH32	
17	G	R01 E00 209	LOW PRESSURE SWITCH		1	1		63L	
18	G	R01 E49 242	LINEAR EXPANSION VALVE COIL		1	1	Connector:Red	LEV-B	
19	G	R01 H20 401	LINEAR EXPANSION VALVE		2	2	for LEV-A,B		
20	G	—	REPLACE FILTER		1		(BK00C119G02)		
21	G	R01 E13 428	BYPASS VALVE		1				
22	G	T7W E36 242	SOLENOID COIL <BYPASS VALVE>		1			SV	
23	G	T7W E52 202	THERMISTOR (OUTDOOR PIPE)		1	1		TH33	
24	G	R01 E03 418	RESTRICTOR VALVE		1				
25	G	R01 E50 242	LINEAR EXPANSION VALVE COIL		1	1	Connector:White	LEV-A	
26	G	R01 E68 242	LINEAR EXPANSION VALVE COIL		1	1	Connector:Blue	LEV-C	
27	G	R01 H22 401	LINEAR EXPANSION VALVE		1	1	for LEV-C		
28	G	R01 E94 202	THERMISTOR (OUTDOOR 2-PHASE PIPE, OUTDOOR)		1	1		TH6,7	
29	G	R01 E06 208	HIGH PRESSURE SWITCH		1	1		63H	
30	G	R01 E25 413	CHARGE PLUG		1	1			
31	G	T7W E29 716	TERMINAL BLOCK	6P(L,N,⏚,S1,S2,S3)	1	1		TB1	
32	G	—	ELECTRICAL PARTS BOX		1		(BK00B055G41)		
	G	—	ELECTRICAL PARTS BOX			1	(BK00B055G58)		
33	G	T7W E74 315	CONTROLLER CIRCUIT BOARD		1			C.B.	
	G	T7W E90 315	CONTROLLER CIRCUIT BOARD			1		C.B.	
34	G	T7W E18 259	REACTOR		1	1		DCL	
35	G	T7W E51 313	POWER CIRCUIT BOARD		1	1		P.B.	
36	G	R01 E06 239	FUSE	250V 6.3A	4			F1,2,3,4	
	G	R01 E14 239	FUSE	250V 6.3A		4		F1,2,3,4	
37	G	R01 H00 202	THERMISTOR (OUTDOOR PIPE)		1	1		TH3	
38	G	R01 E20 254	MAIN SMOOTHING CAPACITOR		1	1		CB	

FUNCTIONAL AND ELECTRICAL PARTS
PUHZ-HRP100YHA
PUHZ-HRP125YHA

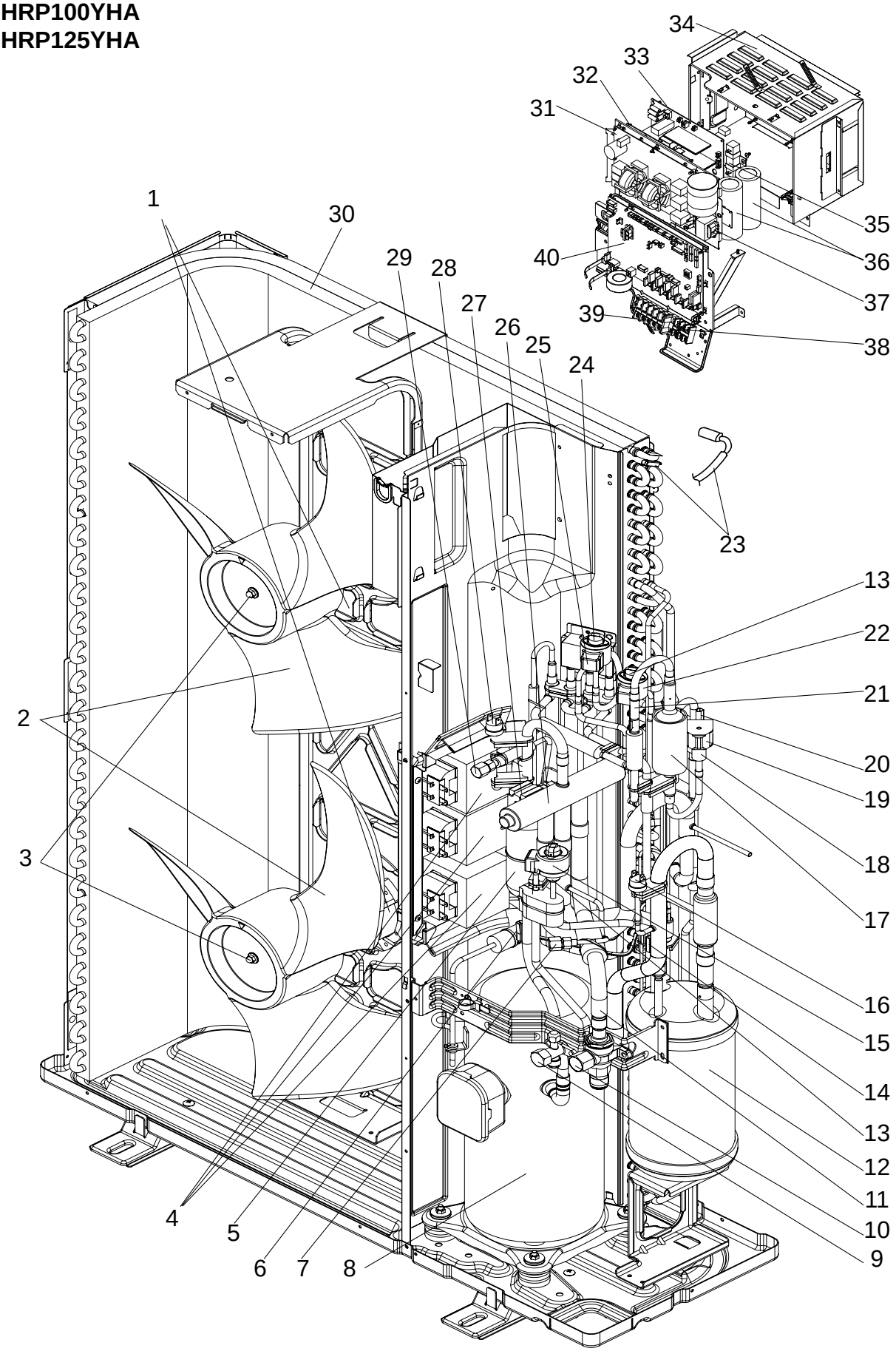

Part numbers that are circled are not shown in the figure.

No.	RoHS	Part No.	Part Name	Specification	Q'ty/set PUHZ-HRP 100 YHA	Q'ty/set PUHZ-HRP 125 YHA	Remarks (Drawing No.)	Wiring Diagram Symbol	Recom-mended Q'ty
1	G	T7W E27 763	FAN MOTOR	EHDS81B86MS1	2	2		MF1,2	
2	G	R01 E08 115	PROPELLER FAN		2	2			
3	G	R01 E09 097	NUT		2	2			
4	G	T7W E12 259	REACTOR		3	3		ACL1,2,3	
5	G	R01 E10 467	MUFFLER		1	1			
6	G	T7W E03 201	THERMISTOR (DISCHARGE)		1	1		TH4	
7	G	R01 E14 413	CHARGE PLUG		1	1			
8	G	T97 415 757	COMPRESSOR	ANB33FJBMT	1	1	Including RUBBER MOUNTS	MC	
9	G	R01 E13 410	STOP VALVE	3/8	1	1			
10	G	R01 E12 410	BALL VALVE	5/8	1	1			
11	G	R01 32L 450	STRAINER		1	1			
12	G	R01 E43 440	POWER RECEIVER		1	1			
13	G	R01 H20 401	LINEAR EXPANSION VALVE		2	2			
14	G	R01 H17 202	THERMISTOR (OUTDOOR PIPE)		1	1		TH32	
15	G	R01 E49 242	LINEAR EXPANSION VALVE COIL		1	1	Connector:Red	LEV-B	
16	G	R01 E00 209	LOW PRESSURE SWITCH		1	1		63L	
17	G	—	REPLACE FILTER		1	1	(BK00C119G02)		
18	G	R01 E13 428	BYPASS VALVE		1	1			
19	G	T7W E31 242	SOLENOID COIL <BYPASS VALVE>		1	1		SV	
20	G	T7W E52 202	THERMISTOR (OUTDOOR PIPE)		1	1		TH33	
21	G	R01 E03 418	RESTRICTOR VALVE		1	1			
22	G	R01 E50 242	LINEAR EXPANSION VALVE COIL		1	1	Connector:White	LEV-A	
23	G	R01 H01 202	THERMISTOR (OUTDOOR 2-PHASE PIPE, OUTDOOR)		1	1		TH6,7	
24	G	R01 H22 401	LINEAR EXPANSION VALVE		1	1			
25	G	R01 E68 242	LINEAR EXPANSION VALVE COIL		1	1	Connector:Blue	LEV-C	
26	G	R01 E32 403	4-WAY VALVE		1	1			
27	G	T7W E39 242	SOLENOID COIL <4-WAY VALVE>		1	1		21S4	
28	G	R01 E06 208	HIGH PRESSURE SWITCH		1	1		63H	
29	G	R01 E25 413	CHARGE PLUG		1	1			
30	G	R01 H01 408	HEAT EXCHANGER		1	1			
31	G	T7W E23 346	NOISE FILTER CIRCUIT BOARD		1	1		N.F.	
32	G	T7W E63 310	CONVERTER CIRCUIT BOARD		1	1		CONV.B.	
33	G	T7W E42 313	POWER CIRCUIT BOARD		1	1		P.B.	
34	G	—	ELECTRICAL PARTS BOX		1	1	(BK00C410G09)		
35	G	R01 E10 233	RESISTOR		1	1		RS	
36	G	R01 E02 254	MAIN SMOOTHING CAPACITOR		2	2		CB1, CB2	
37	G	R01 E31 259	REACTOR		1	1		ACL4	
38	G	R01 E18 246	TERMINAL BLOCK	3P (S1,S2,S3)	1	1		TB2	
39	G	T7W E30 716	TERMINAL BLOCK	5P (L1,L2,L3,N,⏚)	1	1		TB1	
40	G	T7W E59 315	CONTROLLER CIRCUIT BOARD		1	1		C.B.	
41	G	R01 E06 239	FUSE	250V 6.3A	4	4		F1,2,3,4	
42	G	R01 H00 202	THERMISTOR (OUTDOOR PIPE)		1	1		TH3	
43	G	T7W E10 254	CAPACITOR		1	1		CK	

FUNCTIONAL AND ELECTRICAL PARTS
PUHZ-HRP100YHA2
PUHZ-HRP125YHA2
PUHZ-HRP100YHA2R1
PUHZ-HRP125YHA2R1

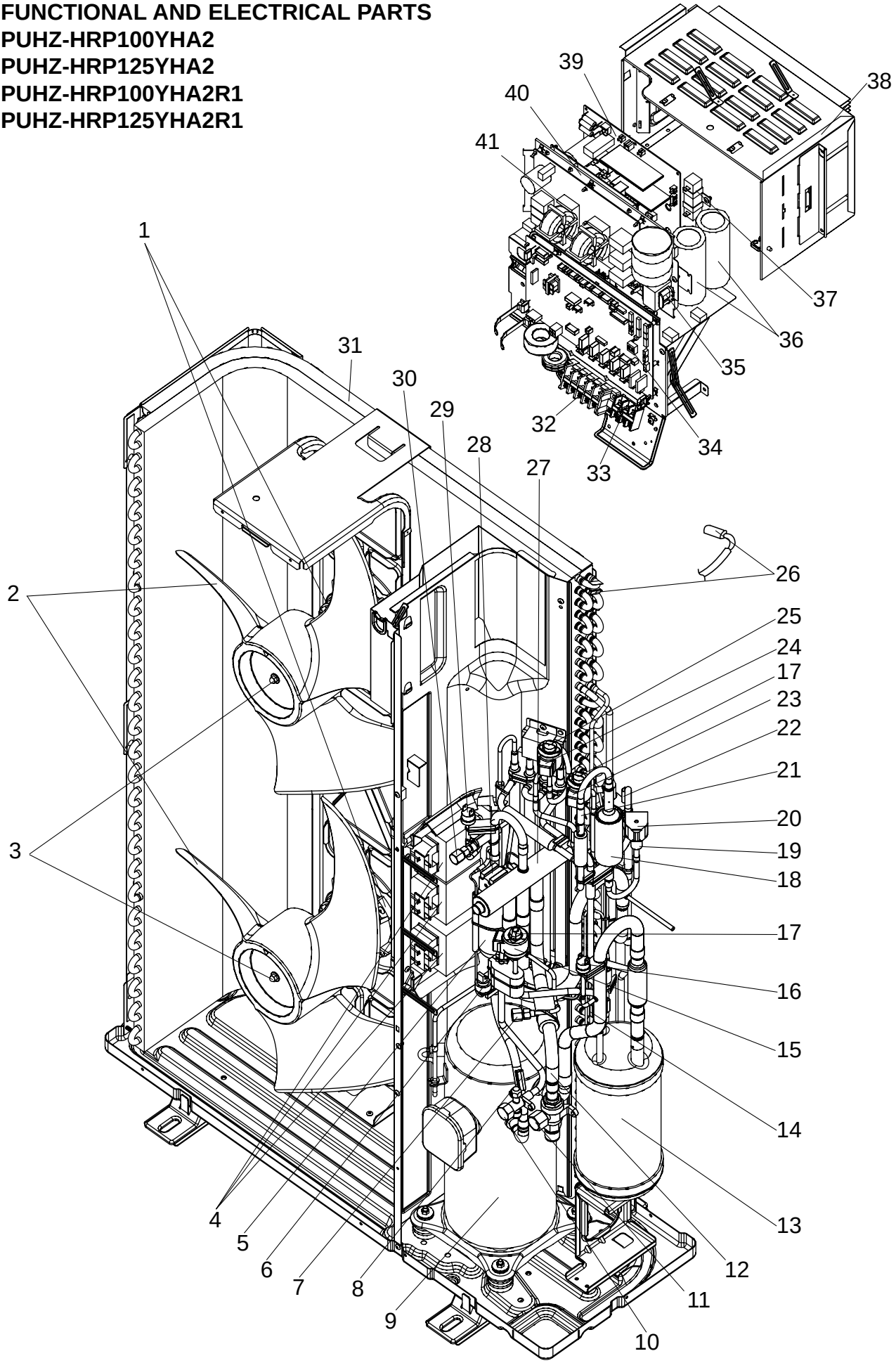

Part numbers that are circled are not shown in the figure.

No.	RoHS	Part No.	Part Name	Specification	Q'ty/set PUHZ-HRP 100,125 YHA2	Q'ty/set PUHZ-HRP 100,125 YHA2R1	Remarks (Drawing No.)	Wiring Diagram Symbol	Recom-mended Q'ty
1	G	R01 E50 221	FAN MOTOR	SIC-71FW-D874	2	2		MF1,2	
2	G	R01 E08 115	PROPELLER FAN		2	2			
3	G	R01 E09 097	NUT		2	2			
4	G	T7W E12 259	REACTOR		3	3		ACL1,2,3	
5	G	R01 E10 467	MUFFLER		1	1			
6	G	R01 E07 208	HIGH PRESSURE SENSOR		1	1		63HS	
7	G	R01 E14 413	CHARGE PLUG		1				
	G	T7W E11 413	CHARGE PLUG			1			
8	G	T7W E04 201	THERMISTOR (DISCHARGE)		1	1		TH4	
9	G	T97 415 768	COMPRESSOR	ANB33FJDMT	1	1	Including RUBBER MOUNTS	MC	
10	G	R01 E13 410	STOP VALVE	3/8	1	1			
11	G	R01 E12 410	BALL VALVE	5/8	1	1			
12	G	R01 32L 450	STRAINER		1	1			
13	G	R01 E43 440	POWER RECEIVER		1	1			
14	G	R01 H17 202	THERMISTOR (OUTDOOR PIPE)		1	1		TH32	
15	G	R01 E49 242	LINEAR EXPANSION VALVE COIL		1	1	Connector:Red	LEV-B	
16	G	R01 H20 401	LINEAR EXPANSION VALVE		2	2	for LEV-A,B		
17	G	R01 E00 209	LOW PRESSURE SWITCH		1	1		63L	
18	G	—	REPLACE FILTER		1		(BK00C119G02)		
19	G	R01 E13 428	BYPASS VALVE		1				
20	G	T7W E31 242	SOLENOID COIL <BYPASS VALVE>		1			SV	
21	G	R01 E03 418	RESTRICTOR VALVE		1				
22	G	T7W E52 202	THERMISTOR (OUTDOOR PIPE)		1	1		TH33	
23	G	R01 E50 242	LINEAR EXPANSION VALVE COIL		1	1	Connector:White	LEV-A	
24	G	R01 E68 242	LINEAR EXPANSION VALVE COIL		1	1	Connector:Blue	LEV-C	
25	G	R01 H22 401	LINEAR EXPANSION VALVE		1	1	for LEV-C		
26	G	R01 H01 202	THERMISTOR (OUTDOOR 2-PHASE PIPE, OUTDOOR)		1	1		TH6,7	
27	G	R01 E32 403	4-WAY VALVE		1				
	G	R01 E15 403	4-WAY VALVE			1			
28	G	T7W E39 242	SOLENOID COIL <4-WAY VALVE>		1	1		21S4	
29	G	R01 E06 208	HIGH PRESSURE SWITCH		1	1		63H	
30	G	R01 E25 413	CHARGE PLUG		1	1			
31	G	R01 H01 408	HEAT EXCHANGER		1	1			
32	G	T7W E30 716	TERMINAL BLOCK	5P (L1,L2,L3,N,⏚)	1	1		TB1	
33	G	R01 E18 246	TERMINAL BLOCK	3P (S1,S2,S3)	1	1		TB2	
34	G	T7W E75 315	CONTROLLER CIRCUIT BOARD		1			C.B.	
	G	T7W E90 315	CONTROLLER CIRCUIT BOARD			1		C.B.	
35	G	R01 E31 259	REACTOR		1	1		ACL4	
36	G	R01 E02 254	MAIN SMOOTHING CAPACITOR		2	2		CB1, CB2	
37	G	R01 E10 233	RESISTOR		1	1		RS	
38	G	—	ELECTRICAL PARTS BOX		1	1	(BK00C410G09)		
39	G	T7W E50 313	POWER CIRCUIT BOARD		1	1		P.B.	
40	G	T7W E75 310	CONVERTER CIRCUIT BOARD		1	1		CONV.B.	
41	G	T7W E23 346	NOISE FILTER CIRCUIT BOARD		1	1		N.F.	
42	G	R01 E06 239	FUSE	250V 6.3A	4			F1,2,3,4	
	G	R01 E14 239	FUSE	250V 6.3A		4		F1,2,3,4	
43	G	R01 H00 202	THERMISTOR (OUTDOOR PIPE)		1	1		TH3	
44	G	T7W E10 254	CAPACITOR		1	1		CK	

STRUCTURAL PARTS
PUHZ-HRP71VHA
PUHZ-HRP100VHA
PUHZ-HRP100YHA
PUHZ-HRP125YHA

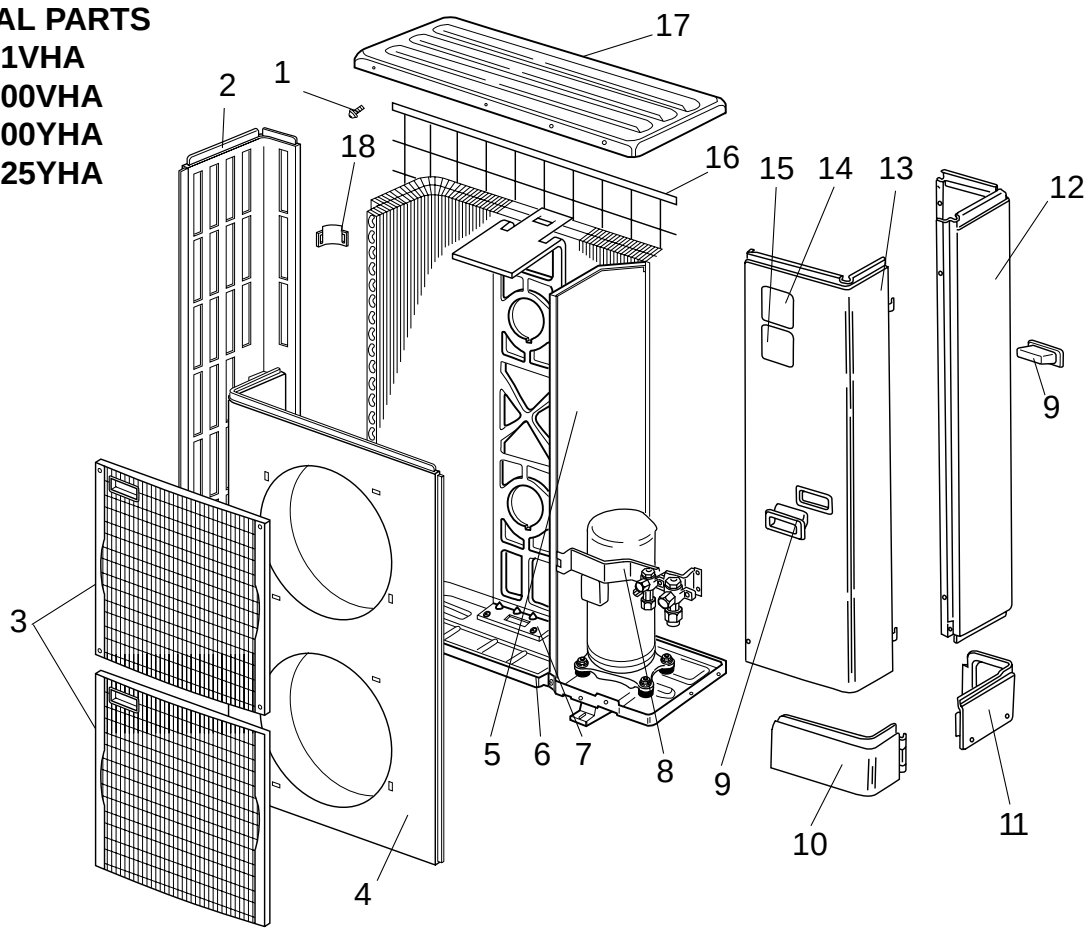

No.	RoHS	Part No.	Part Name	Specification	Q'ty/set PUHZ-HRP 71,100 VHA	Q'ty/set PUHZ-HRP 100,125 YHA	Remarks (Drawing No.)	Wiring Diagram Symbol	Recom-mended Q'ty
1	G	—	F.ST SCREW	(5X10)	38	38	(DG12F536H10)		
2	G	R01 E20 662	SIDE PANEL (L)		1	1			
3	G	T7W E03 691	FAN GRILLE		2	2			
4	G	T7W E06 667	FRONT PANEL		1	1			
5	G	—	SEPARATOR		1		(BK00C143GA2)		
	G					1	(BK00C409G10)		
6	G	R01 E31 686	BASE ASSY		1	1			
7	G	R01 E27 130	MOTOR SUPPORT		1	1			
8	G	—	VALVE BED ASSY		1	1	(BK00C142G16)		
9	G	R01 E01 655	HANDLE		2	2			
10	G	R01 E23 658	COVER PANEL (FRONT)		1	1			
11	G	R01 E22 658	COVER PANEL (REAR)		1	1			
12	G	R01 E37 661	SIDE PANEL (R)		1	1			
13	G	T7W E08 667	SERVICE PANEL		1	1			
14	G	—	LABEL (MITSUBISHI)		1	1	(DG79R130H01)		
15	G	—	LABEL (ZUBADAN)		1	1	(BH79L116H02)		
16	G	R01 E07 698	REAR GUARD		1	1			
17	G	R01 E14 641	TOP PANEL		1				
	G	R01 E15 641	TOP PANEL			1			
18	G	R01 E02 655	HANDLE		1	1			

STRUCTURAL PARTS
PUHZ-HRP71VHA2
PUHZ-HRP100VHA2
PUHZ-HRP100YHA2
PUHZ-HRP125YHA2
PUHZ-HRP71VHA2R1
PUHZ-HRP100VHA2R1
PUHZ-HRP100YHA2R1
PUHZ-HRP125YHA2R1

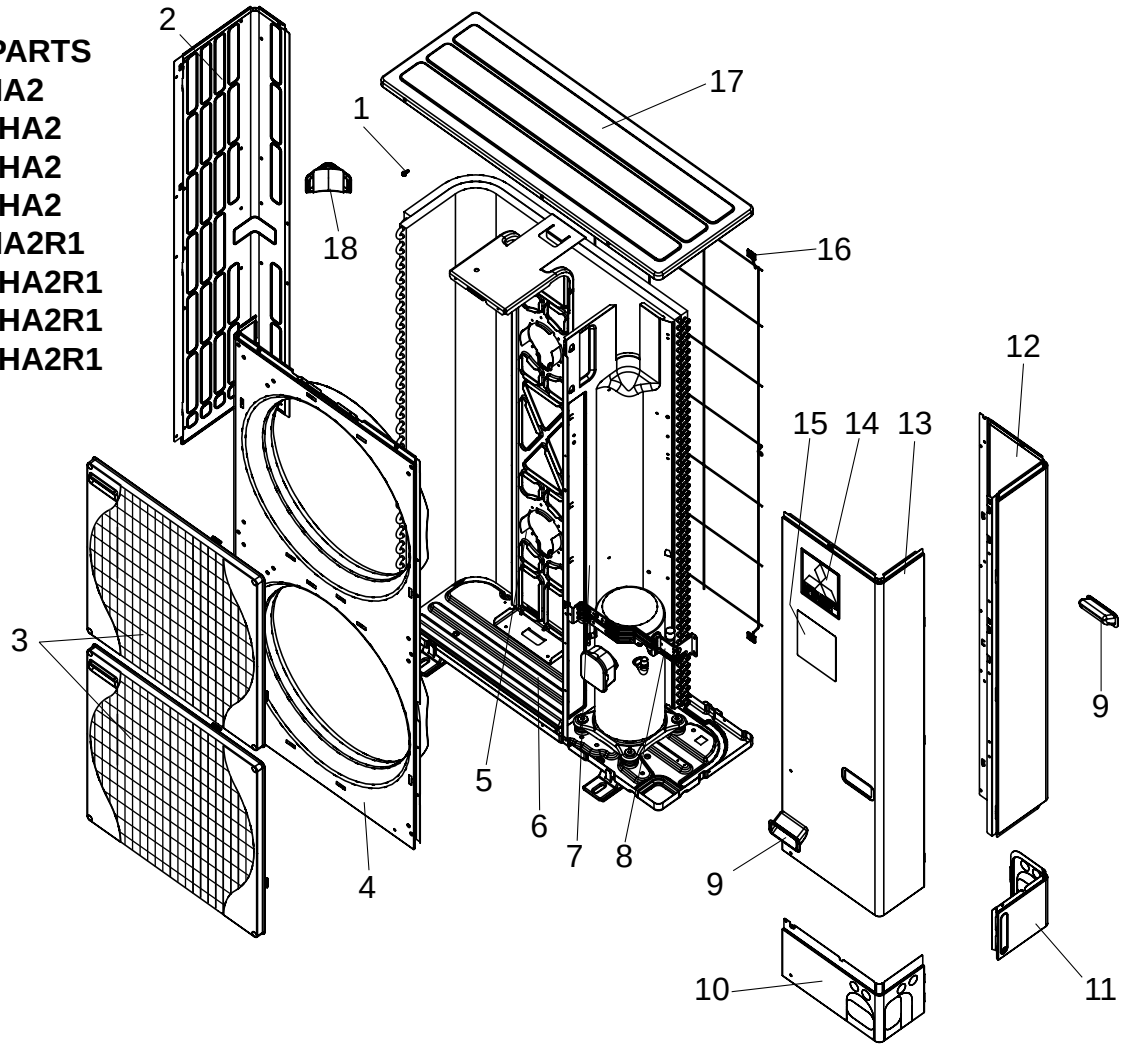

No.	RoHS	Part No.	Part Name	Specification	Q'ty/set PUHZ-HRP 71,100 VHA2	100,125 YHA2	71,100 VHA2R1	100,125 YHA2R1	Remarks (Drawing No.)	Wiring Diagram Symbol	Recom-mended Q'ty
1	G	—	F.ST SCREW	(5×10)	38	38	38	38	(DG12F536H10)		
2	G	R01 E20 662	SIDE PANEL (L)		1	1	1	1			
3	G	R01 E33 691	FAN GRILLE		2	2	2	2			
4	G	R01 E14 668	FRONT PANEL		1	1					
	G	R01 E20 668	FRONT PANEL				1	1			
5	G	R01 E27 130	MOTOR SUPPORT		1	1	1	1			
6	G	R01 E31 686	BASE ASSY		1	1	1	1			
7	G	—	SEPARATOR		1				(BK00C143GF5)		
	G					1			(BK00C409G17)		
	G						1		(BK00C143GF8)		
	G							1	(BK00C409G20)		
8	G	—	VALVE BED ASSY		1	1	1	1	(BK00C142G28)		
9	G	R01 E01 655	HANDLE		2	2	2	2			
10	G	R01 E23 658	COVER PANEL (FRONT)		1	1	1	1			
11	G	R01 E22 658	COVER PANEL (REAR)		1	1	1	1			
12	G	R01 E37 661	SIDE PANEL (R)		1	1	1	1			
13	G	T7W E08 667	SERVICE PANEL		1	1	1	1			
14	G	—	LABEL (MITSUBISHI)		1	1	1	1	(DG79R130H01)		
15	G	—	LABEL (ZUBADAN)		1	1	1	1	(BH79L116H02)		
16	G	R01 E07 698	REAR GUARD		1	1	1	1			
17	G	R01 E14 641	TOP PANEL		1		1				
	G	R01 E15 641	TOP PANEL			1		1			
18	G	R01 E02 655	HANDLE		1	1	1	1			

2 OPTIONAL PARTS

CONNECTOR FOR DRAIN HOSE HEATER (only PUHZ-HRP·HA2R1)

Part No.	PAC-SE60RA-E

Contents

①Terminal block ×1

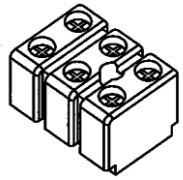

②Screw ×1

③Lead wire with connector×1

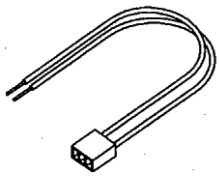

Installation

● **VHA2R1**

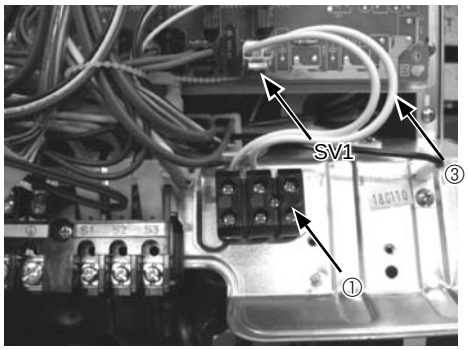

● **YHA2R1**

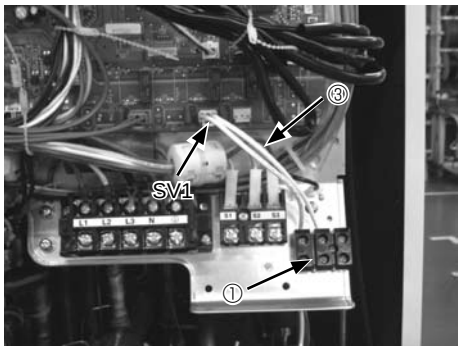

1. Attach the terminal block ①, with the screw ②.
2. Connect the lead wire ③ connector side to SV1 port on the outdoor controller board.
3. Connect the lead wire ③ to the terminal block ①.
4. Wire local cables for a drain hose heater RELAY to the terminal block ①.

- **Drain hose heater RELAY connection only**
- **MAX current 1A**

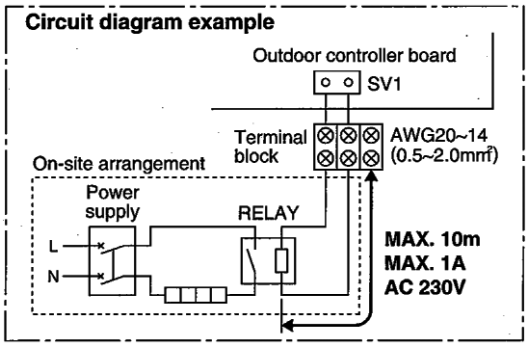

SV1 on the controller board
→ Drain hose heater signal output
With **PAC-SE60RA-E**
From defrost start
For 15 min. ON signal provided

MITSUBISHI ELECTRIC CORPORATION
HEAD OFFICE : TOKYO BLDG., 2-7-3, MARUNOUCHI, CHIYODA-KU, TOKYO 100-8310, JAPAN

©Copyright 2007 MITSUBISHI ELECTRIC ENGINEERING CO., LTD.

Distributed in Dec. 2009 No.OCB425 REVISED EDITION-B PDF 7
Distributed in Sep. 2008 No.OCB425 REVISED EDITION-A PDF 7
Distributed in Oct. 2007 No.OCB425 PDF 8
Made in Japan

New publication, effective Dec. 2009
Specifications subject to change without notice